HONDA

INSTALLATION INSTRUCTIONS

DEC. 2011

FOG OPENING GARNISHES	*CIVIC*

GENERAL VIEW

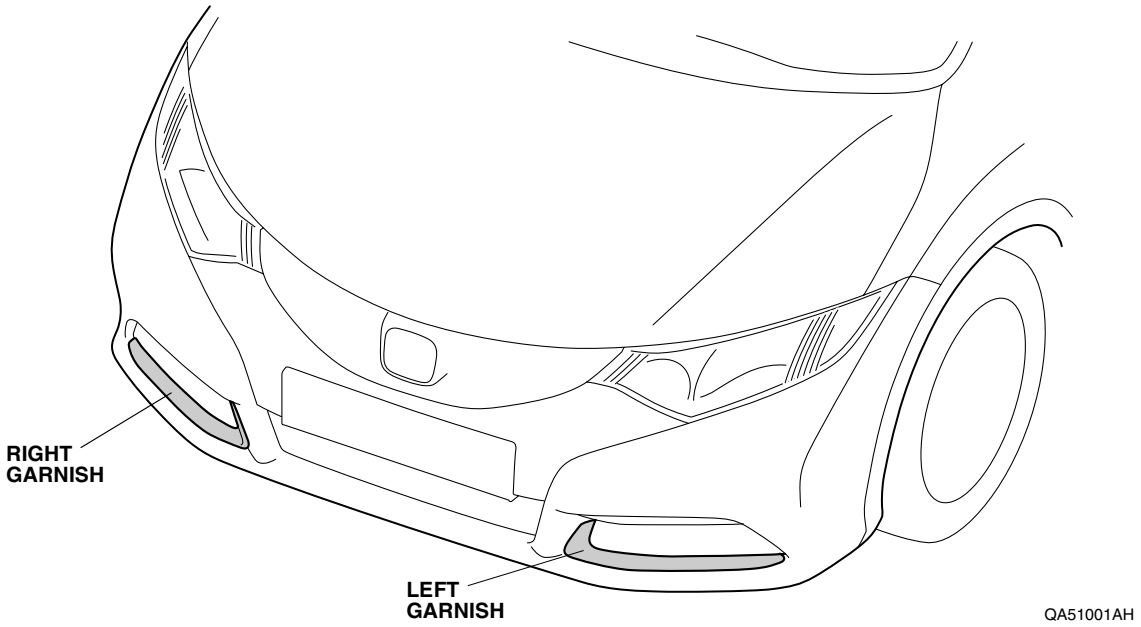

FOR YOUR SAFETY (Read carefully)

Introduction of Symbol Messages

- These symbols warn you about the possible hazards and explain how to avoid them. And give you some advices.

⚠ DANGER	You will be killed or seriously hurt if you do not follow the instructions.
⚠ WARNING	You can be killed or seriously hurt if you do not follow the instructions.
⚠ CAUTION	You can be hurt if you do not follow the instructions.
NOTICE	Gives advice to prevent damage to the product. Gives helpful information or instructions to be followed in using the product.
⃠	Indicates prohibited actions.

© Honda Access Corp. 2011

Introduction of Icons

- These icons indicate the working place and the worker's vision.

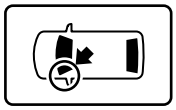
The place for the vehicle.

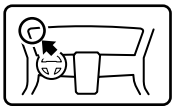
The place for the instrument panel.

- These icons indicate the necessary things for your safety and the work.

Wear eye protection.

Wear heavy gloves.

Work with an assistant.

Place the part on a blanket.

Remove any burrs.

Use the touch-up paint and dry.

Keep the parts and give it to the customer.
(Not use)

Press firmly.

Tighten by specified torque.

Work perpendicularly.

Clean with the contact cleaner.

Safety: General

- Be careful not to damage the vehicle and the parts.

Safety: For the Accessory

- Do not perform installation work and attaching work at the place where gets the direct rays of the sun or the dust appears.
- Always install these accessories at the ambient air temperature 15°C (60°F) or above.
- Heat the accessories and bonding surfaces if the ambient air temperature is below 15°C (60°F).
- Attach the accessories by pressing it firmly with the palm of your hand. Be careful not to damage the accessories and the vehicle parts.
- Carefully place the double-sided adhesive tape on the proper position. Once the double-sided adhesive tape touches the surface, do not try to detach and relocate it. If you attempt to move after it touches the surface, you will damage the part before the adhesive will give way.
- Not to wash the vehicle or moisten it for 24 hours to allow the adhesive to cure.

PARTS LIST

Fog Opening Garnishes Kit

Left garnish	Right garnish	Cleaners (2)
		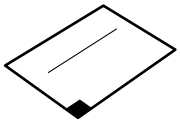

TOOLS AND SUPPLIES REQUIRED

- Masking tape

INSTALLATION

Installing the Garnishes

1. Clean the attaching area.

NOTICE
• Dry thoroughly.

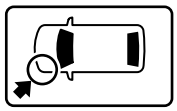

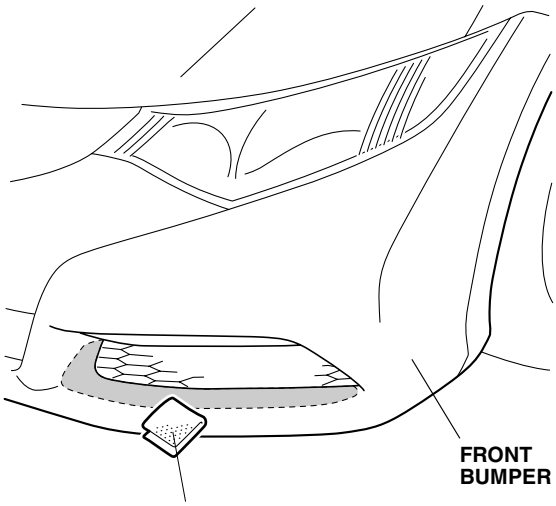

QA51002AH

2. Temporarily attach the adhesive backings.
3. Remove the adhesive backing.

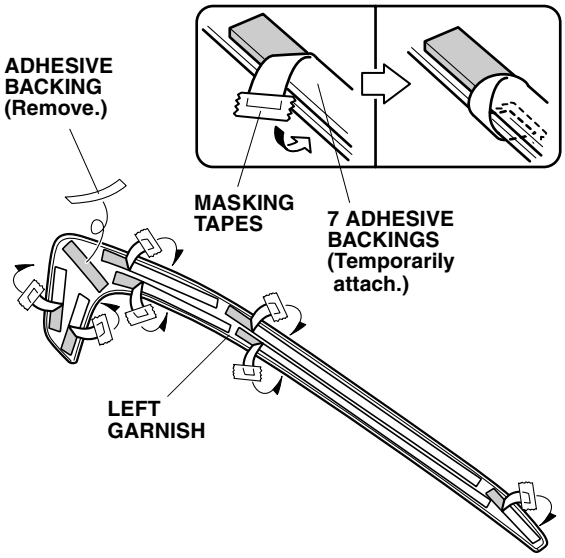

QA51003AH

4. Attach the left garnish.

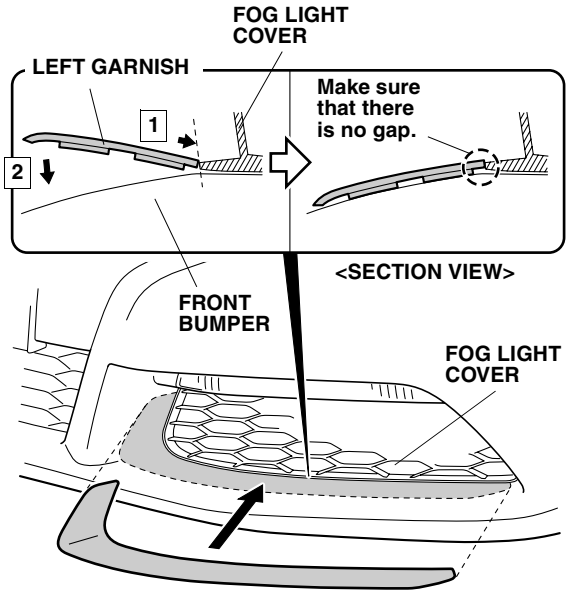

QA51004AH

5. Press the left garnish.

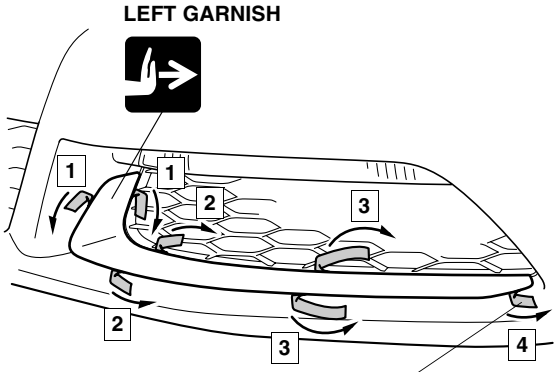

QA51005AH

6. Repeat same procedures for the other side.

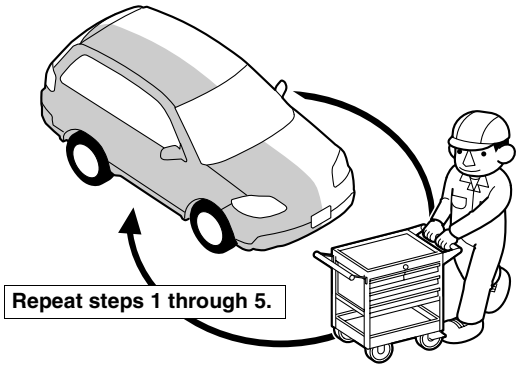

Q9D1014AM

7. Check that all parts are installed properly.
   (End of installation)