INSTALLATION INSTRUCTIONS	FRONT MUD GUARD	AUG. 2006
	JAZZ	

Parts List

Left front mud guard	Right front mud guard	Self-tapping screws (6)
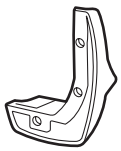	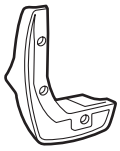	

Tools Required

- Stubby Phillips screwdriver
- Pushpin

Before You Begin

Customer Information

- These instructions are for the left mud guard. The same procedure applies to the right mud guard.

© Honda Access Corp. 2006

Installation

1. Turn the steering wheel all the way counter-clockwise.
2. Using a pushpin, pierce the center of the three clips on the left front inner fender.

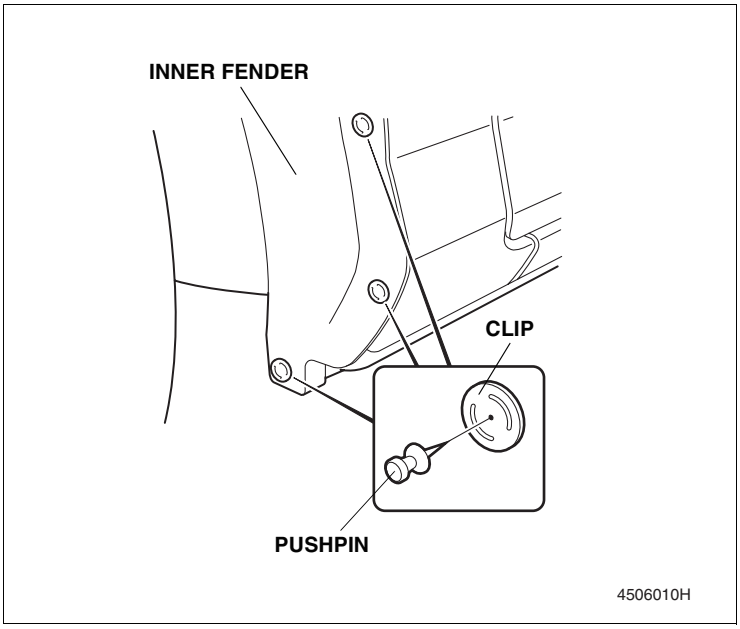
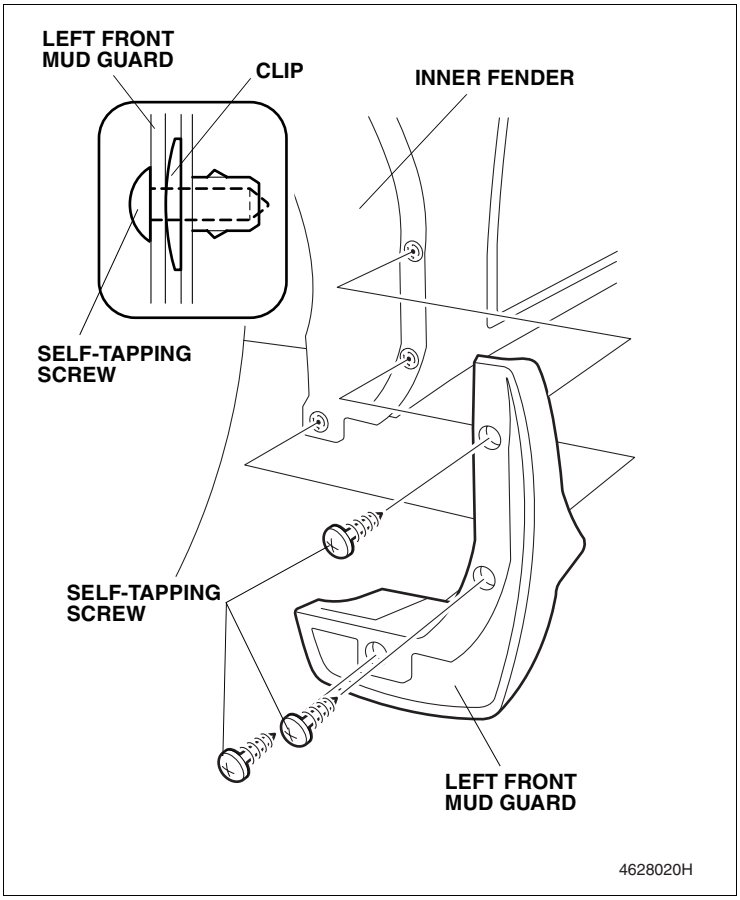
3. Position the left front mud guard on the inner fender and install three self-tapping screws.
4. Turn the steering wheel all the way clockwise, and repeat steps 2 and 3 on the right side of the car.