PARKING AID CAMERA	*CR-V*

GENERAL VIEW

<LHD models>

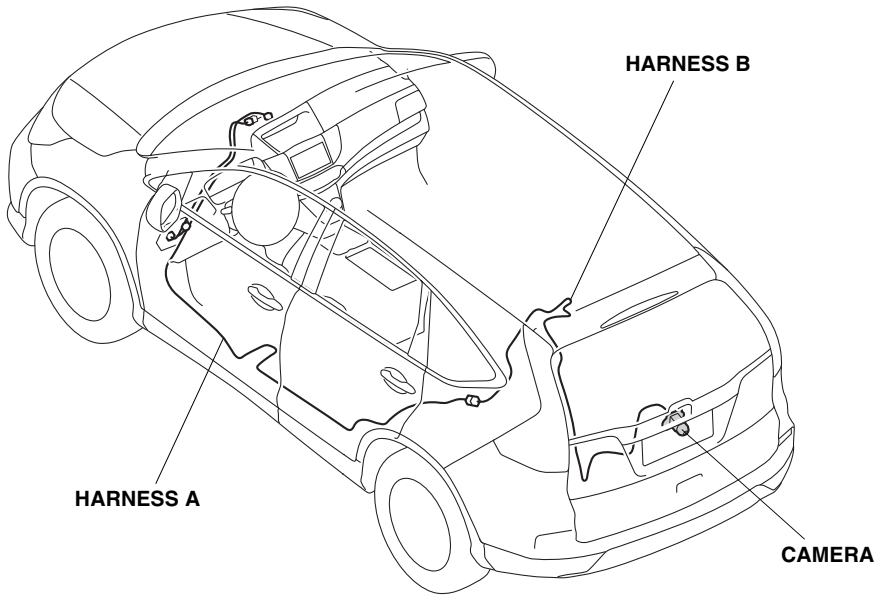

QD80531BA

<RHD models>

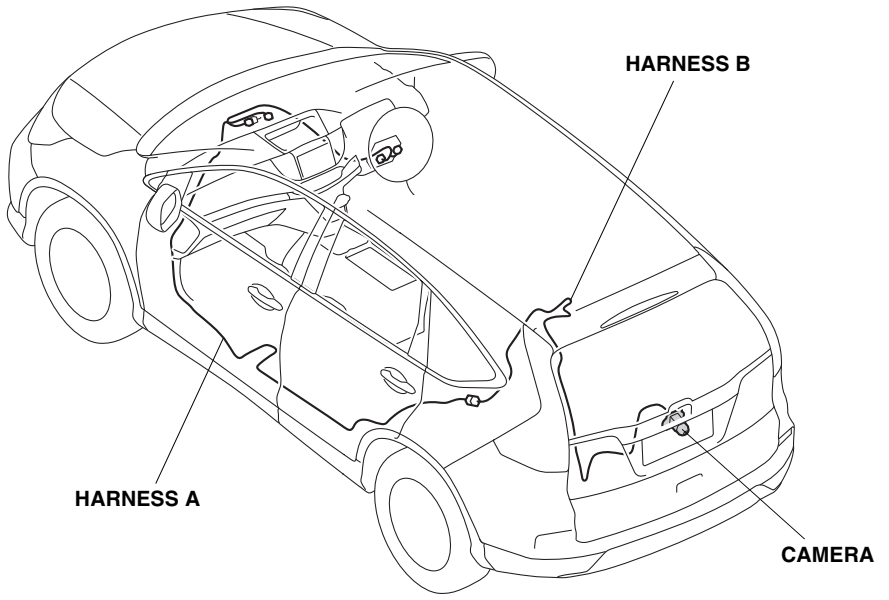

QD80532BA

© Honda Access Corp. 2015

FOR YOUR SAFETY (Read carefully)

Introduction of Symbol Messages

- These symbols warn you about the possible hazards and explain how to avoid them. And give you some advices.

⚠ DANGER	You will be killed or seriously hurt if you do not follow the instructions.
⚠ WARNING	You can be killed or seriously hurt if you do not follow the instructions.
⚠ CAUTION	You can be hurt if you do not follow the instructions.
NOTICE	Gives advice to prevent damage to the product. Gives helpful information or instructions to be followed in using the product.
	Indicates prohibited actions.

Introduction of Icons

- These icons indicate the working place and the worker's vision.

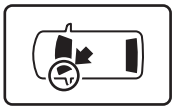 The place for the vehicle.

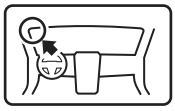 The place for the instrument panel.

- These icons indicate the necessary things for your safety and the work.

Wear eye protection.

Wear heavy gloves.

Work with an assistant.

Place the part on a blanket.

Remove any burrs.

Use the touch-up paint and dry.

Keep the parts and give it to the customer.
(Not use)

Press firmly.

Tighten by specified torque.

Work perpendicularly.

Clean with the contact cleaner.

Wire Harness Routing Precaution

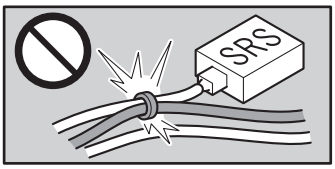

Do not clamp the accessory harness and SRS harness together.

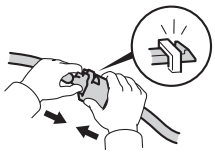

Connect the connectors and terminals securely until they lock.

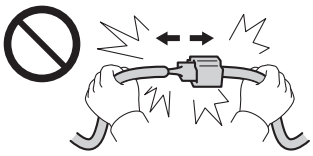

Do not pull the harness to disconnect the connectors.

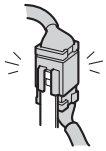

Reinstall the connectors to the original positions if they are removed.

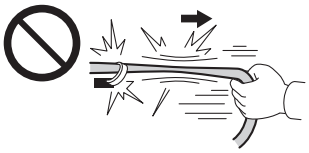

Do not pull the harness strongly.

Secure the accessory harness to the specified position, not to hang down.

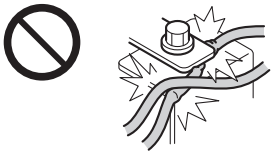

Do not pinch the harness with the parts.

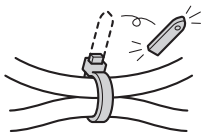

Cut off the excess of the wire ties.

Safety: General

- Observe all safety notes and precautions described in the Shop Manual in addition to those described in this Installation Instruction. Be extremely careful for your safety and safety of others particularly.
- Be careful not to damage the vehicle and the parts.
- Be extremely careful to the handling of the retaining tabs and clips particularly.
- Note the locations of the parts before removing them so that they can be reinstalled in their original positions properly.

Safety: For Electric Parts

- Do not perform the installation of the accessories with having connected negative cable of the battery.

Safety: For the Accessory

- Always use the parts and tools specified in the installation instructions.
- Do not perform installation work and attaching work at the place where gets the direct rays of the sun or the dust appears.
- Always install these accessories at the ambient air temperature 15°C (60°F) or above.
- Heat the accessories and bonding surfaces if the ambient air temperature is below 15°C (60°F).
- Attach the accessories by pressing it firmly with the palm of your hand. Be careful not to damage the accessories and the vehicle parts.
- Carefully place the double-sided adhesive tape on the proper position. Once the double-sided adhesive tape touches the surface, do not try to detach and relocate it. If you attempt to move after it touches the surface, you will damage the part before the adhesive will give way.

PARTS LIST

Attachment Kit

Camera

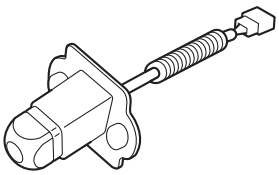

Harness A

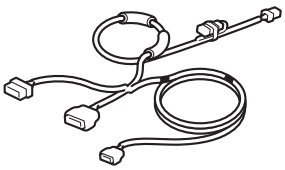

Harness B

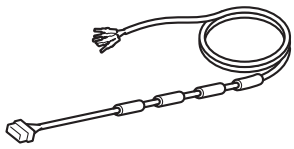

Template

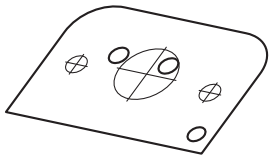

Rear license garnish

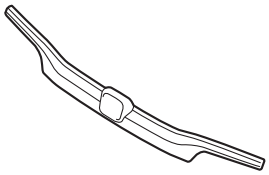

Wire ties (39)

(Some may not used)

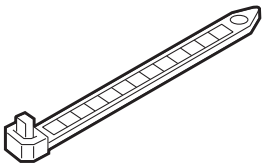

Wire tie with clip

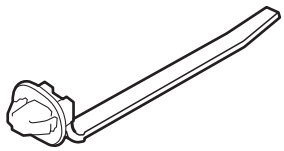

Aluminum tapes (4)

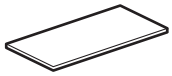

6-Pin connector

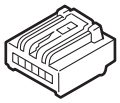

Corrugated tube

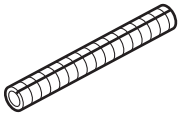

Connector clip

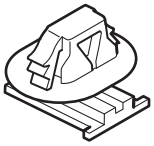

Screws (2)

Cleaner

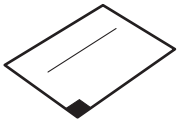

Clip

Owner's manual

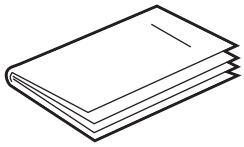

TOOLS AND SUPPLIES REQUIRED

- 10 mm Open end wrench
- Handy remover
- 8 mm and 10 mm Sockets
- Masking tape
- Drill
- File
- Nippers
- Small flat-tip screwdriver
- Contact cleaner
- Tape
- Phillips screwdriver
- Ruler
- 3 mm and 6 mm drill bits
- Touch-up paint
- Scissors
- Torque wrench
- Shop towel
- Ratchet
- Rubber mallet
- Center punch
- 20 mm Hole saw
- Electrical tape
- Steel wire
- Eye protection (face shield, safety goggles, etc.)

INSTALLATION

How to Use the Contact Cleaner

- Using contact cleaner on a shop towel, thoroughly clean the areas where the accessories will be attached.

NOTICE
• Always use the contact cleaner. • Do not apply the cleaner to the object of the work directly. • Completely dry the cleaned areas before attachment work.

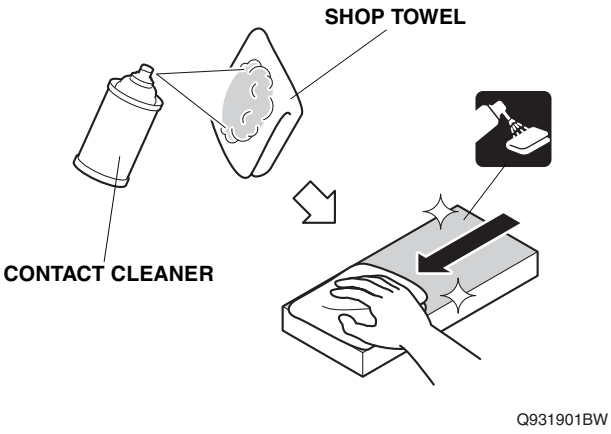

Q931901BW

Disconnecting the Battery Cable

1. Make sure if you have the anti-theft code for the audio/navigation system. Record some settings of the vehicle if necessary.
2. Disconnect the negative cable from the battery.

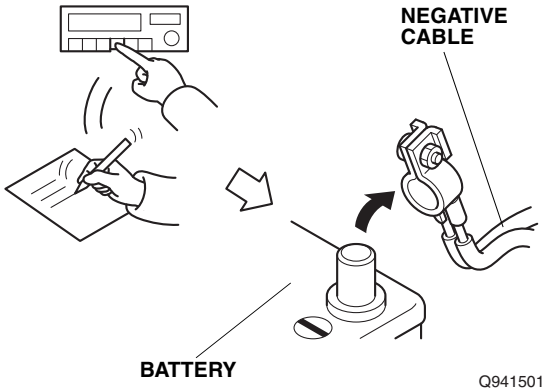

Q941501BW

Removing the Vehicle Parts

• LHD models To step 3 • RHD models To step 23

<LHD models>

3. Remove the driver's panel.

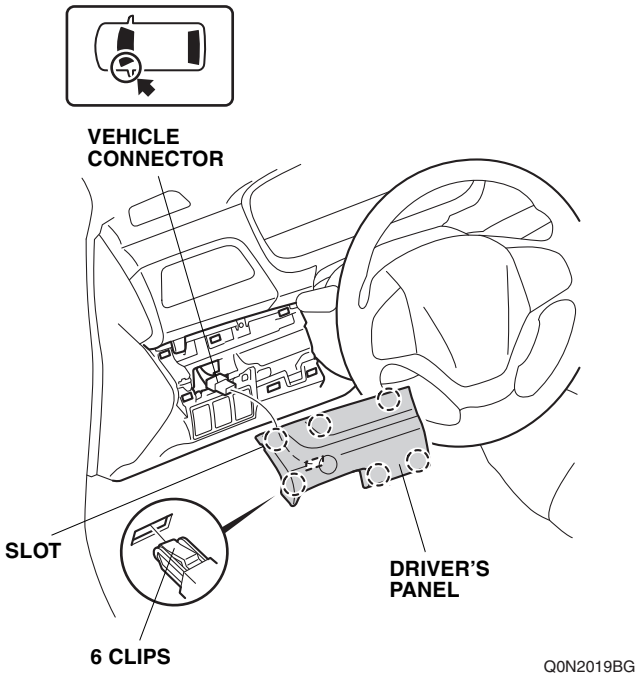

Q0N2019BG

4. Remove the driver's under cover.

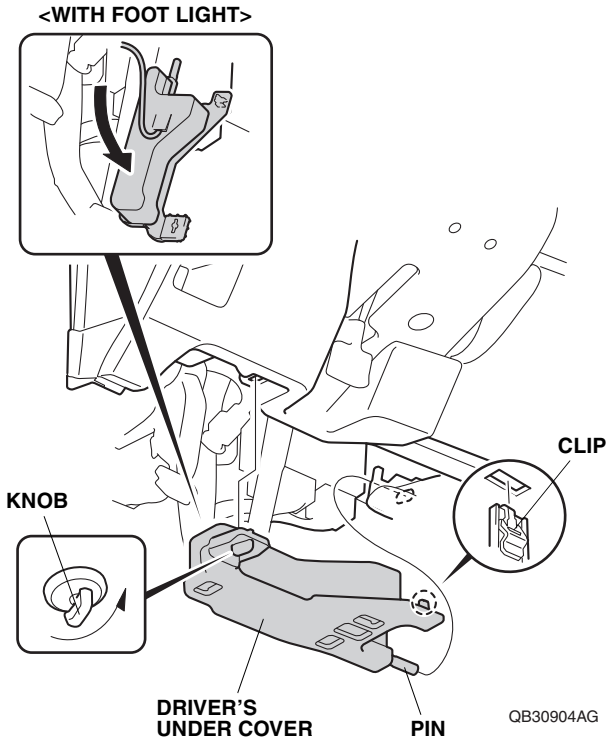

QB30904AG

5. Remove the driver's lower cover.

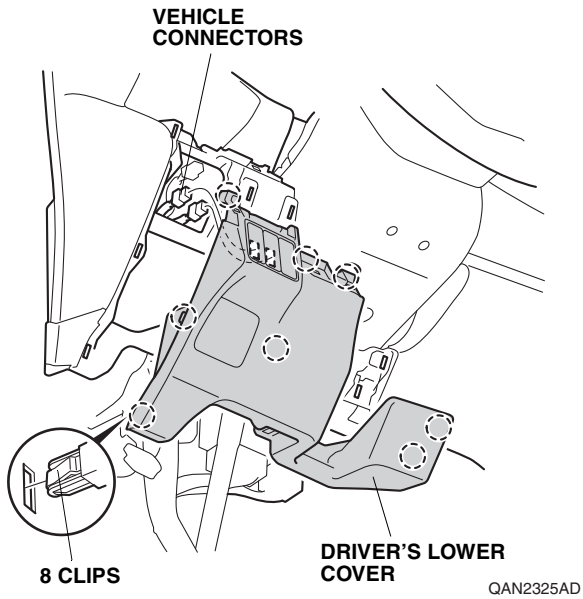

6. Lower the tilt lever.
7. Release the meter visor cover.

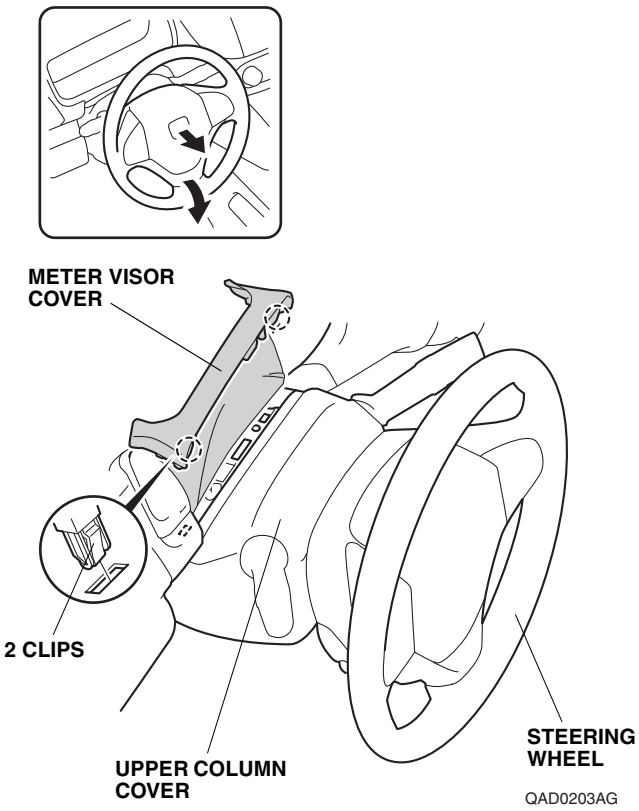

8. Remove the meter visor.

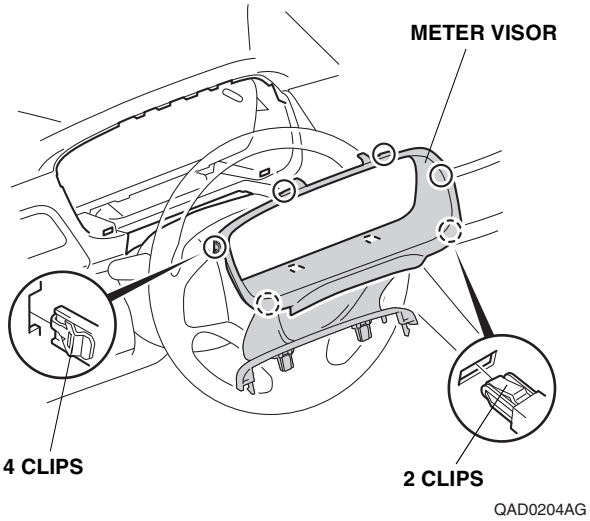

9. Turn the steering wheel 90° clockwise.
10. Release the lock.

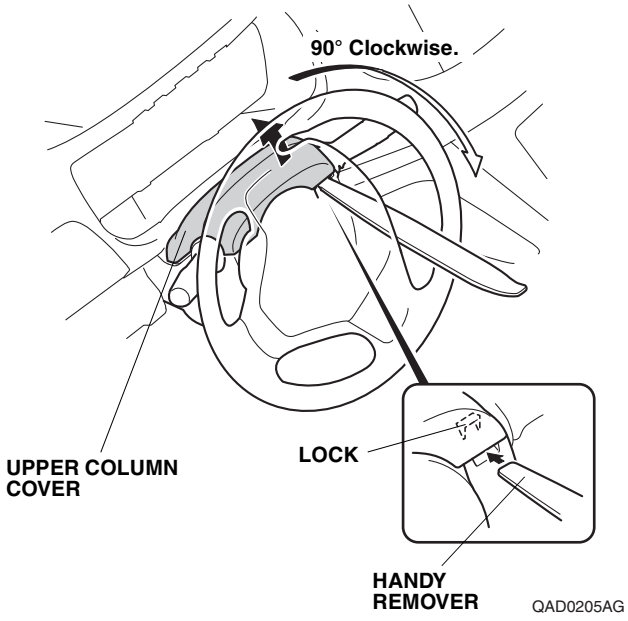

11. Turn the steering wheel 180° counterclockwise.
12. Release the lock.

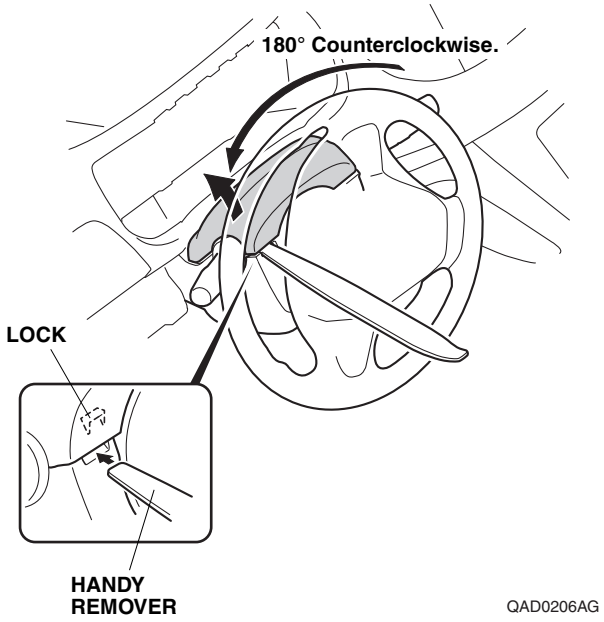

QAD0206AG

13. Remove the upper column cover.

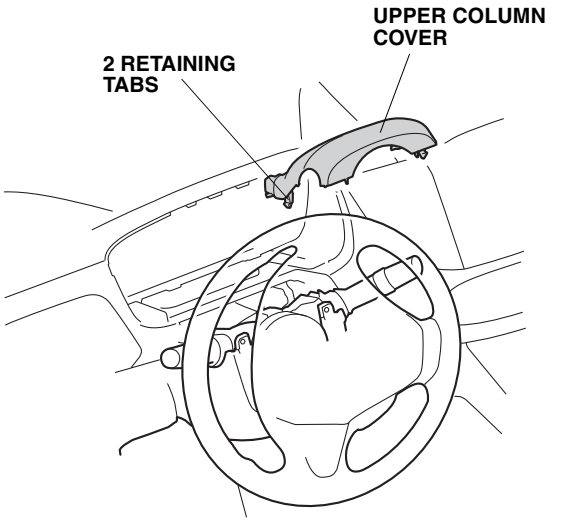

QAD0207AG

14. Remove the meter.

NOTICE
• Do not keep the meter with the dial window down.

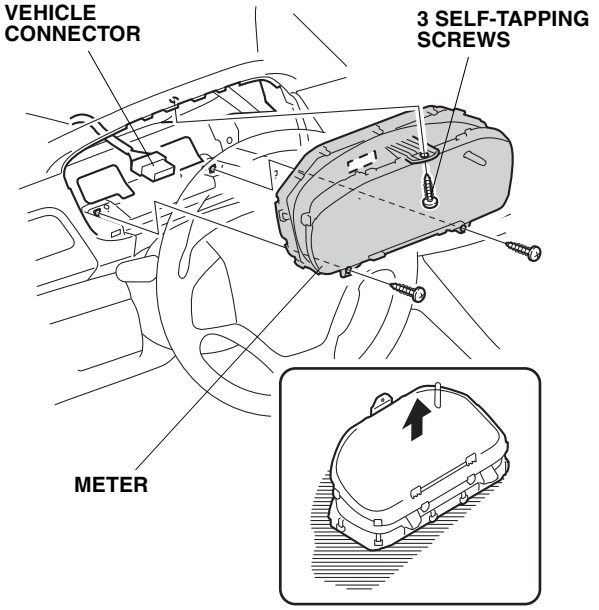

QAD0208AG

15. Attach the tapes to protect the vehicle.

NOTICE
• Do not remove the tapes until after the reinstallation.

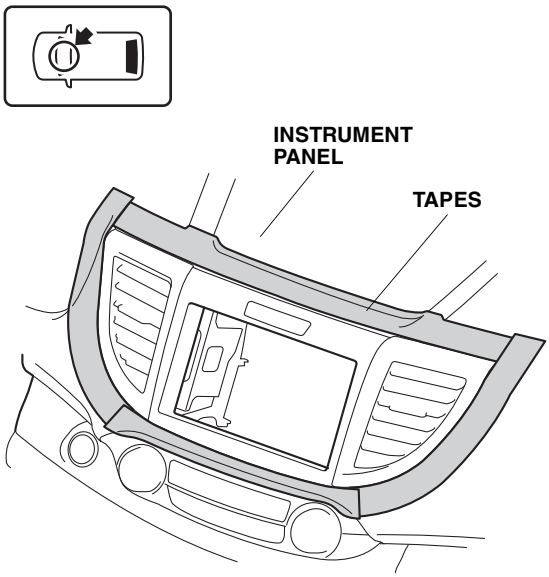

QB31903AB

16. Remove the left center outlet and right center outlet.

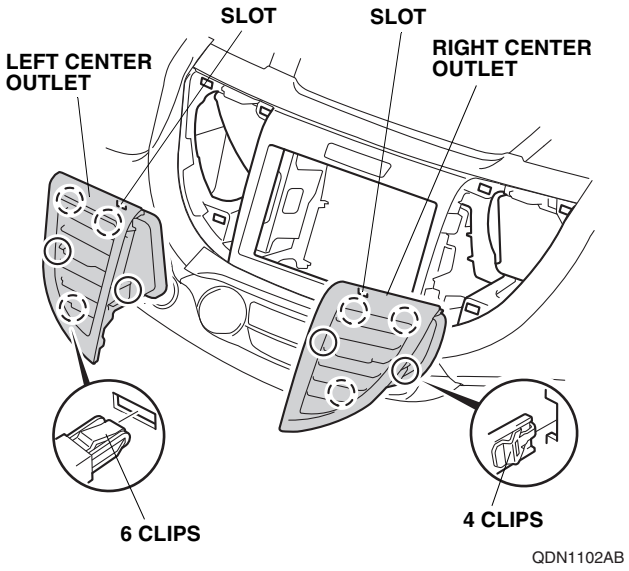

17. Remove the center panel.

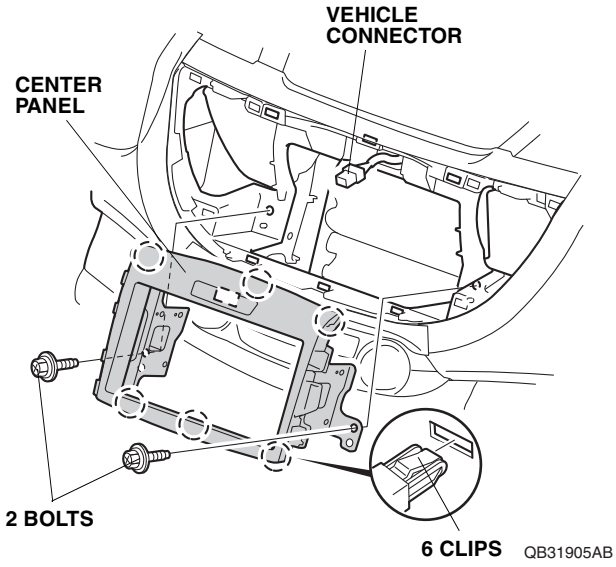

18. Remove the center visor.

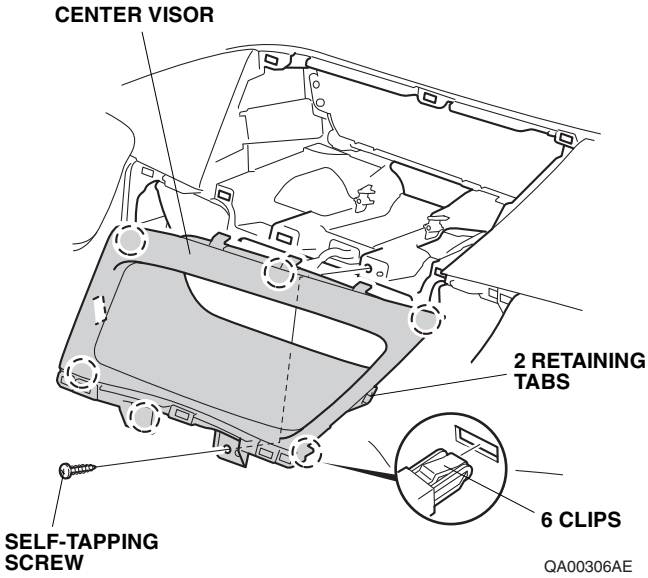

19. Remove the center display.

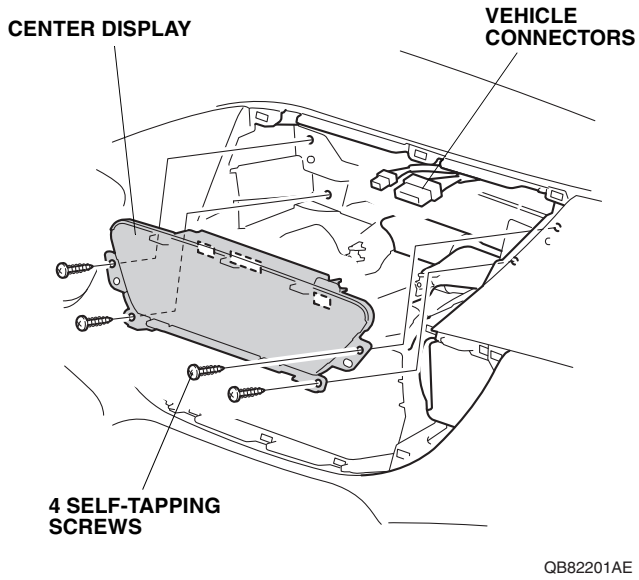

20. Remove the left front side step garnish.

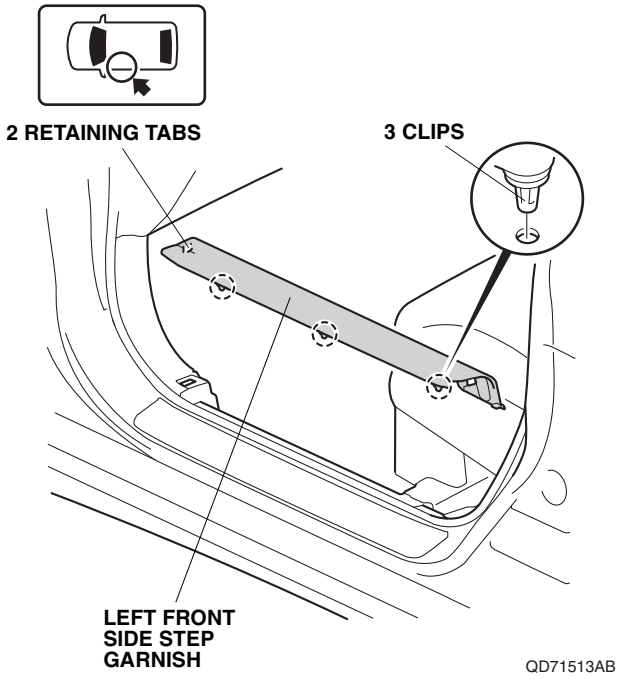

21. Remove the left kick panel.

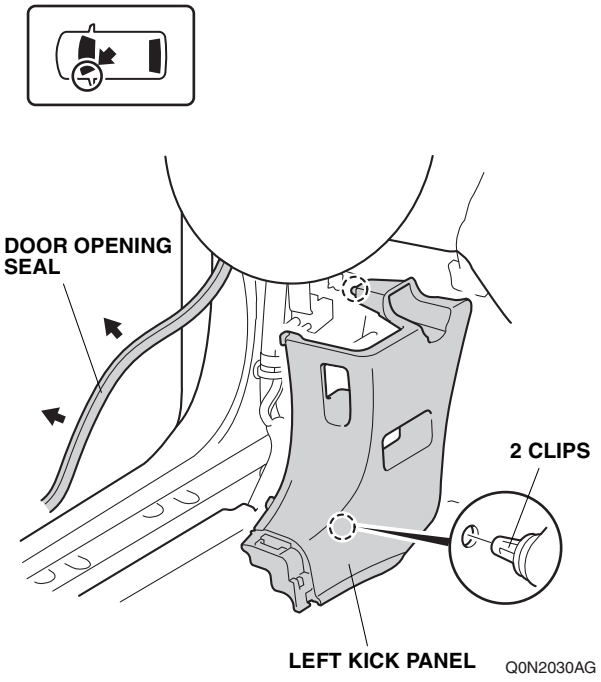

22. Remove the front foot cover and rear foot cover.

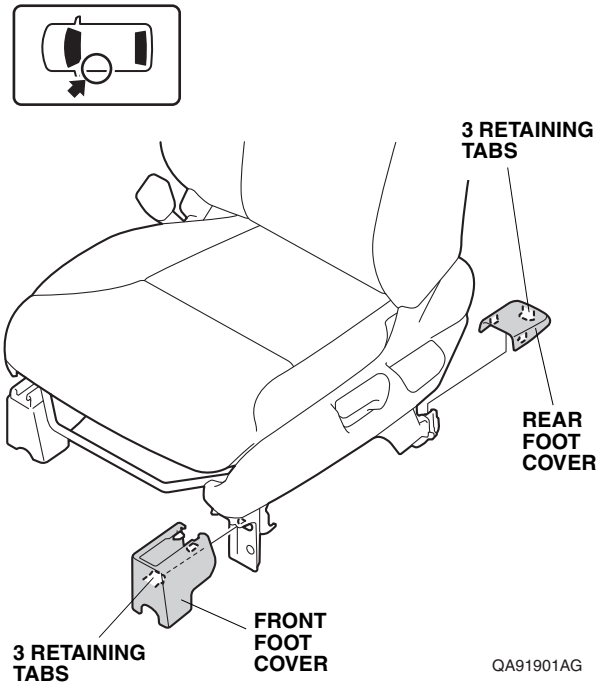

To step 46

<RHD models>

23. Remove the passenger's under cover.

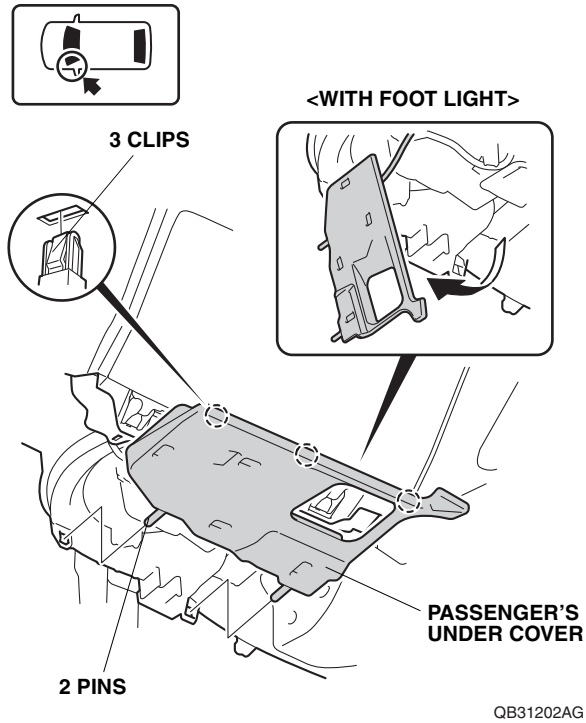

24. Release the damper rod.

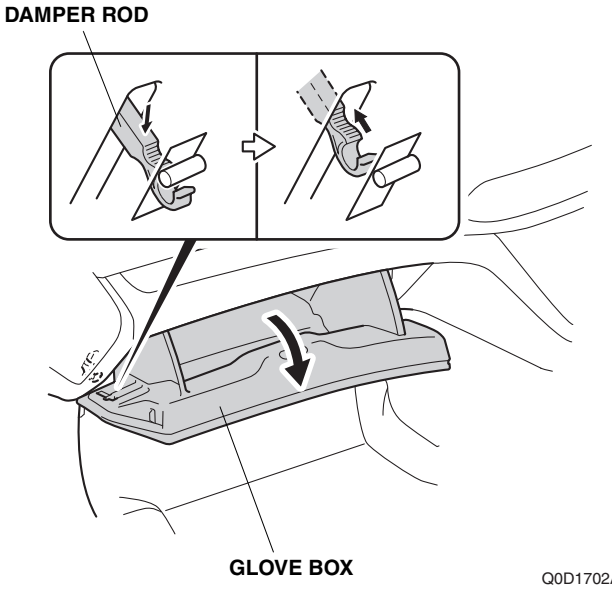

Q0D1702AX

25. Close the glove box.
26. Remove the bolts.

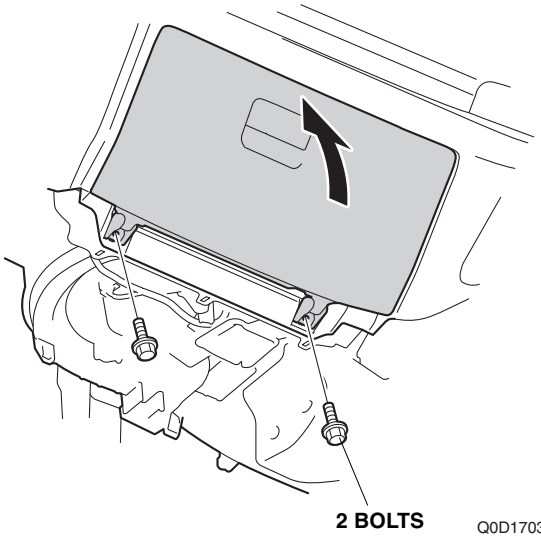

Q0D1703AX

27. Remove the glove box.

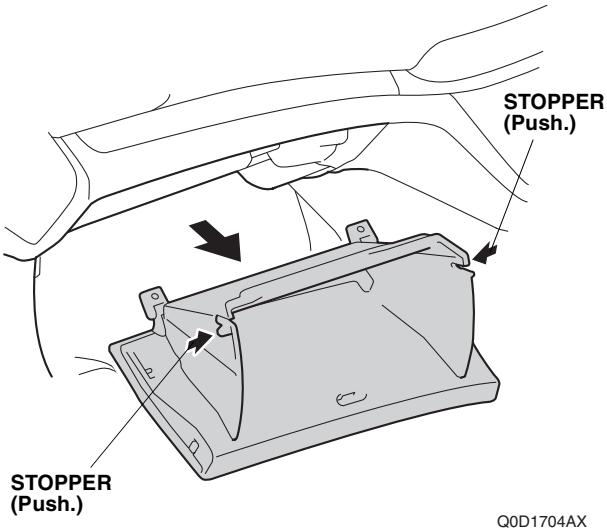

Q0D1704AX

28. Remove the left front side step garnish.

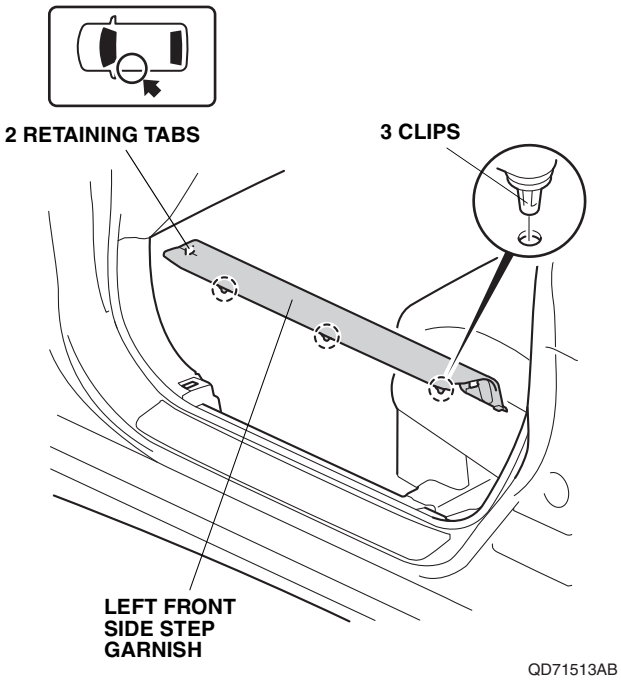

QD71513AB

29. Remove the left kick panel.

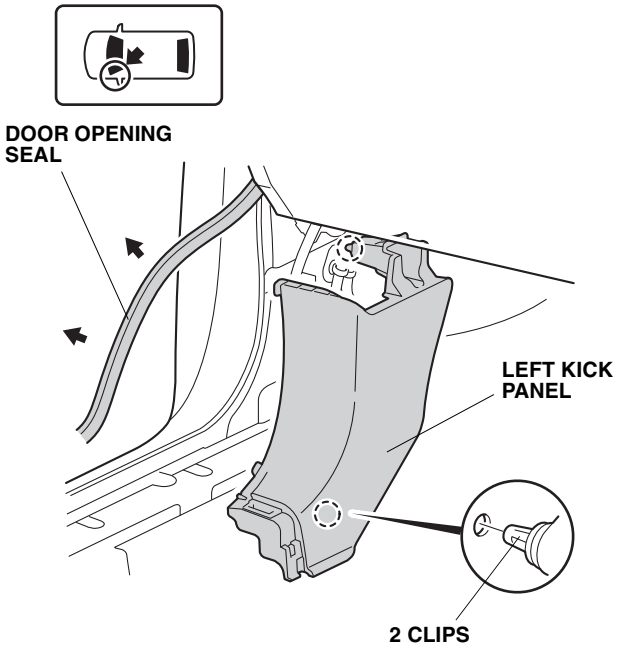

30. Remove the front foot cover and rear foot cover.

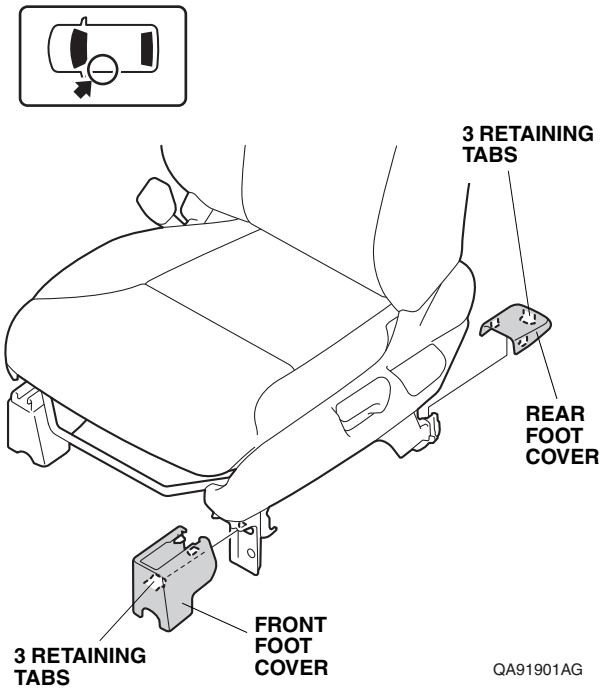

• With unique face audio To step 31 • Without audio To step 36

<With unique face audio>

31. Attach the tapes to protect the vehicle.

NOTICE
• Do not remove the tapes until after the reinstallation.

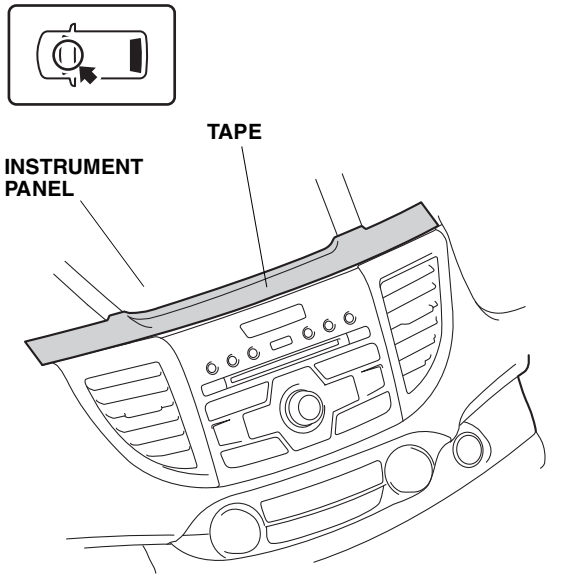

32. Remove the left center outlet and right center outlet.

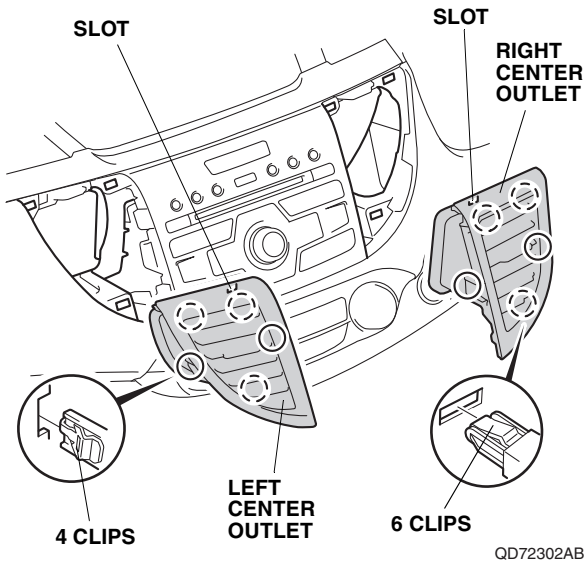

33. Release the center panel.

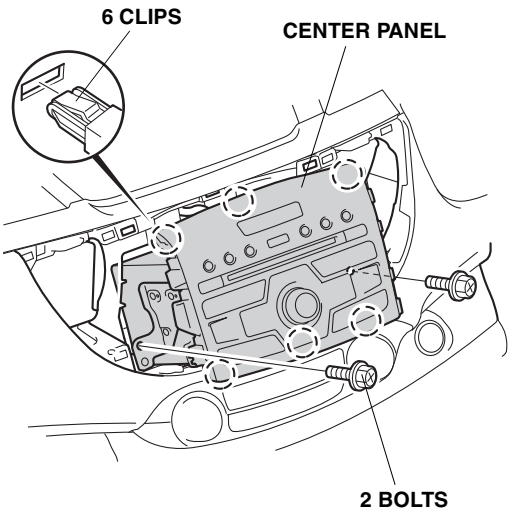

QAD0510AG

34. Insert the shop towel to protect the vehicle.

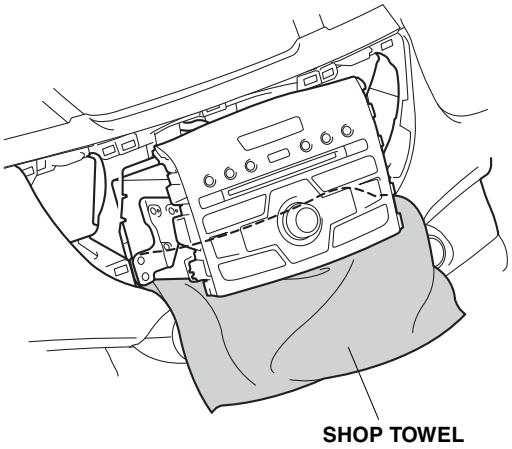

QAD0511AG

35. Remove the center panel.

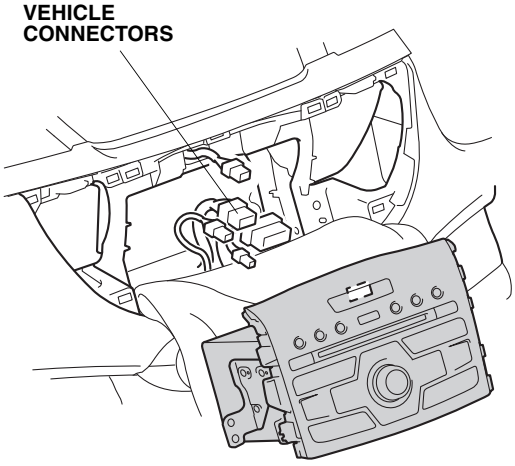

QAD0512AG

To step 39

<Without audio>

36. Attach the tapes to protect the vehicle.

NOTICE
• Do not remove the tapes until after the reinstallation.

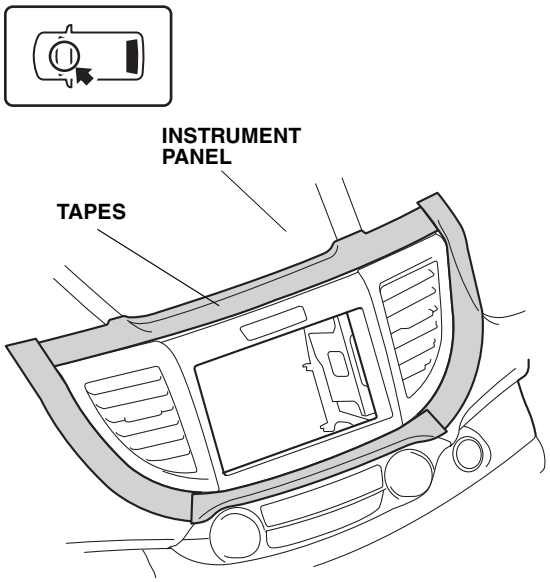

QA52301BX

37. Remove the left center outlet and right center outlet.

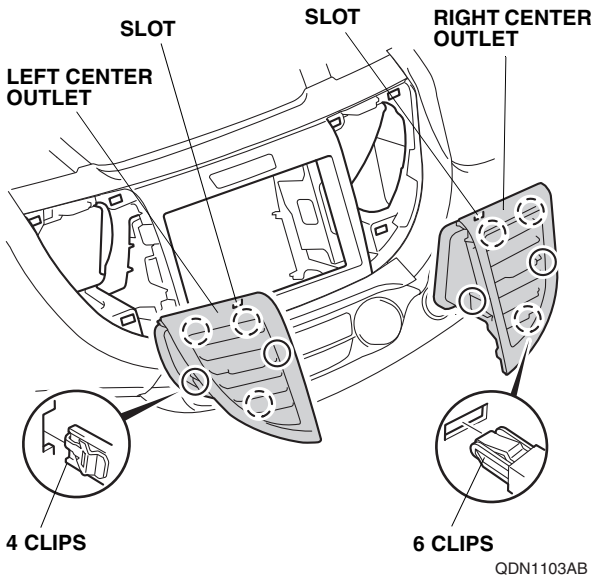

38. Remove the center panel.

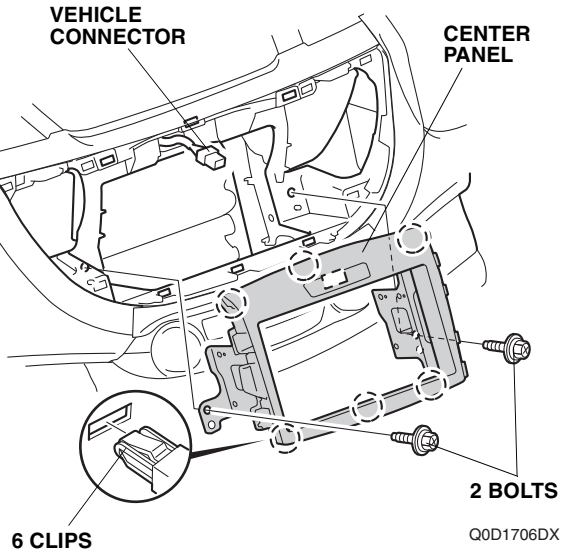

39. Remove the center visor.

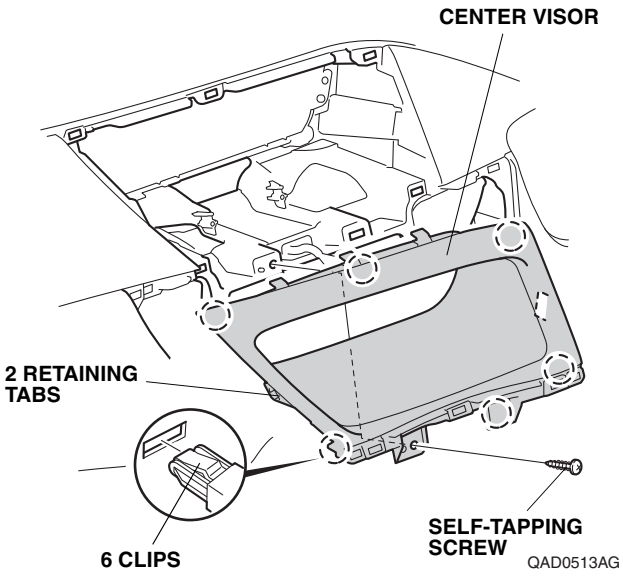

40. Remove the center display.

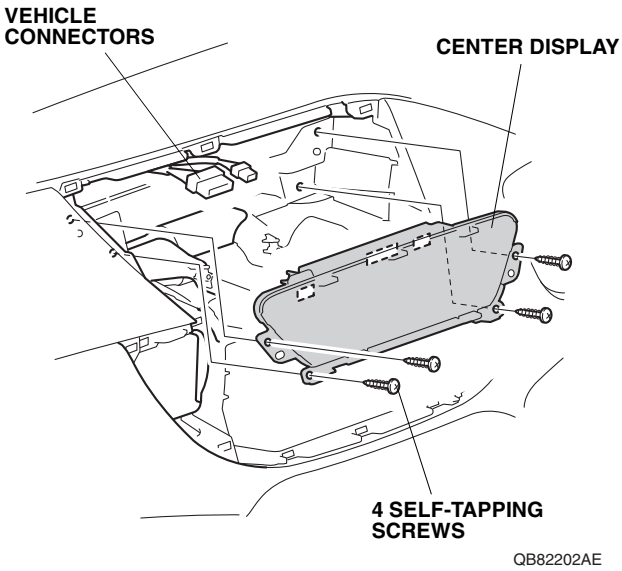

41. Remove the driver's panel.

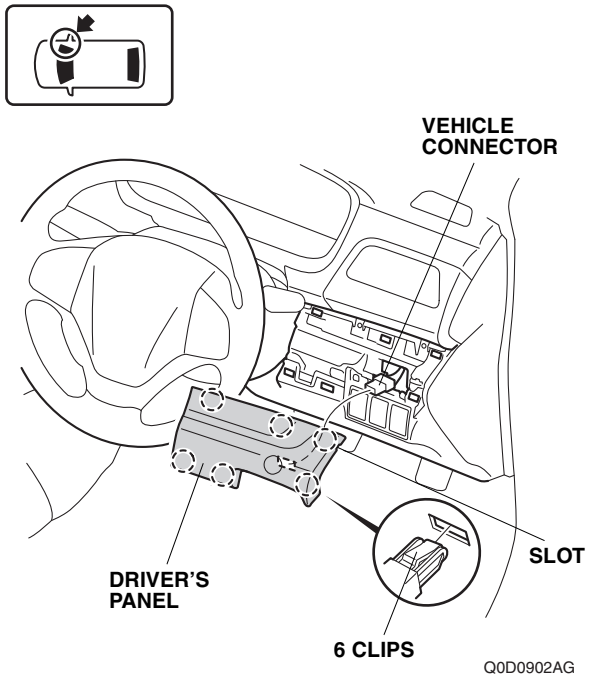

42. Remove the driver's under cover.

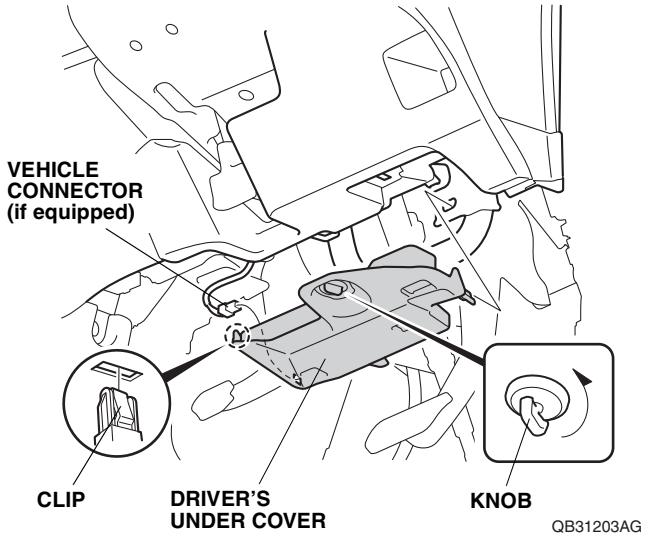

43. Remove the driver's lower cover.

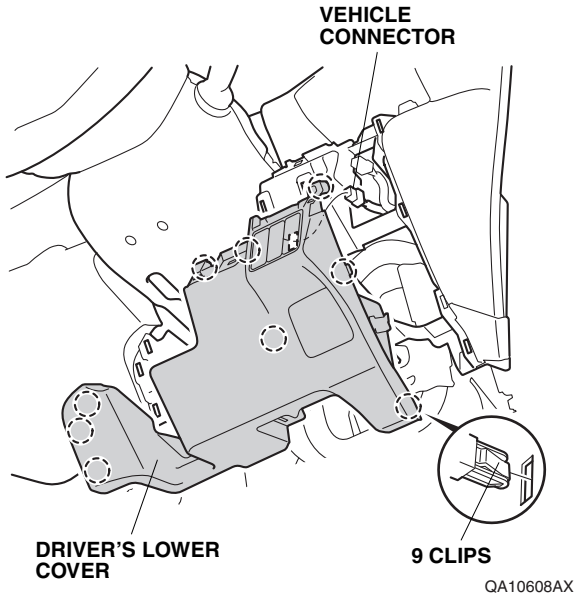

44. Remove the right front side step garnish.

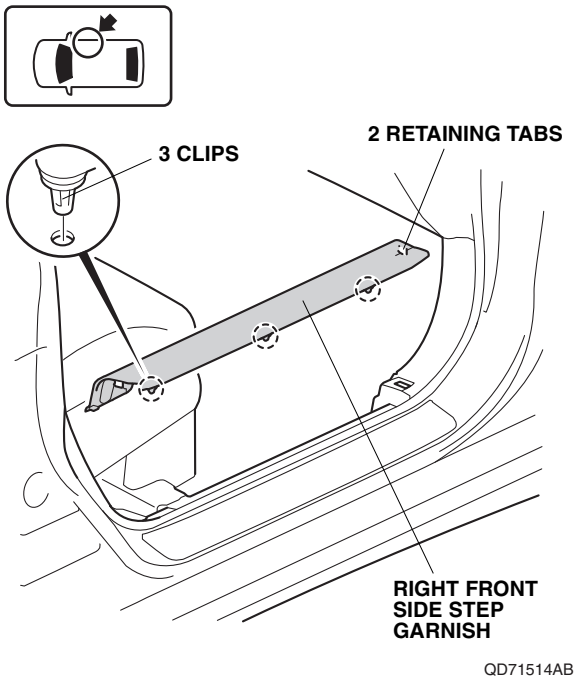

45. Remove the right kick panel.

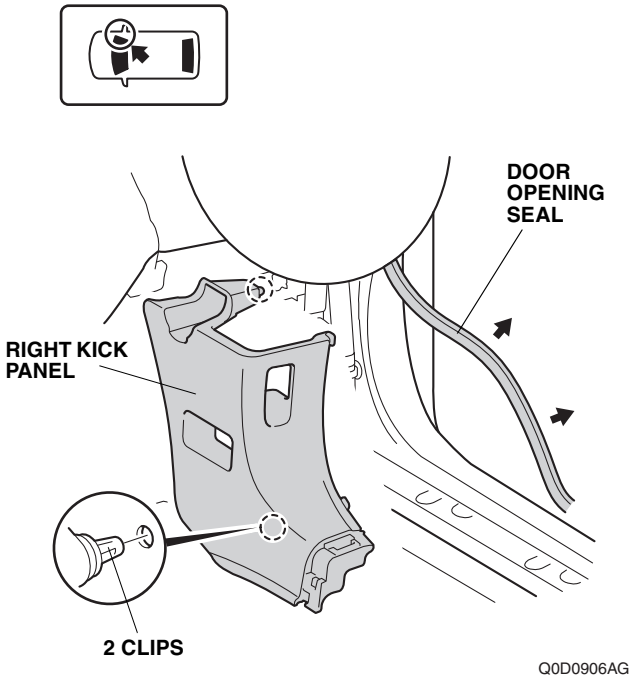

46. Fold down the left rear seat.

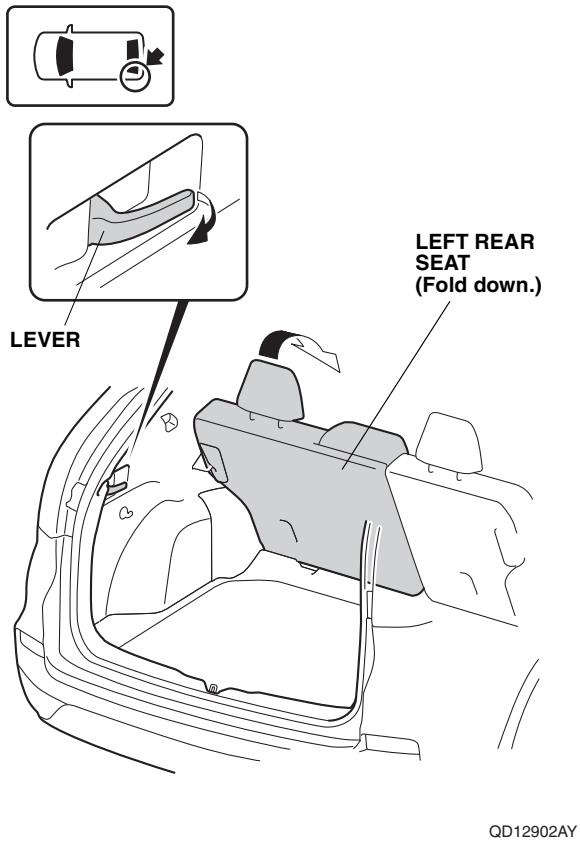

47. Lift the left rear seat back.

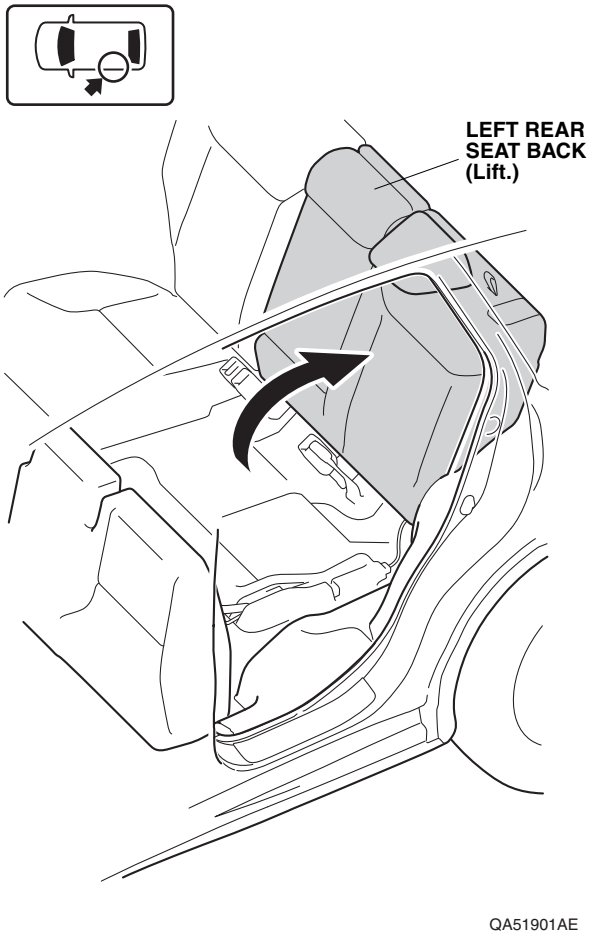

48. Remove the left rear door sill trim.
49. Fold down the left rear seat.

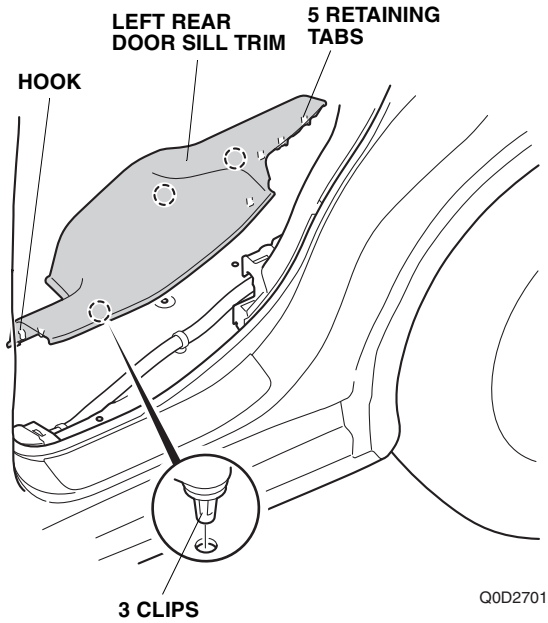

50. Remove the left center pillar lower trim panel.

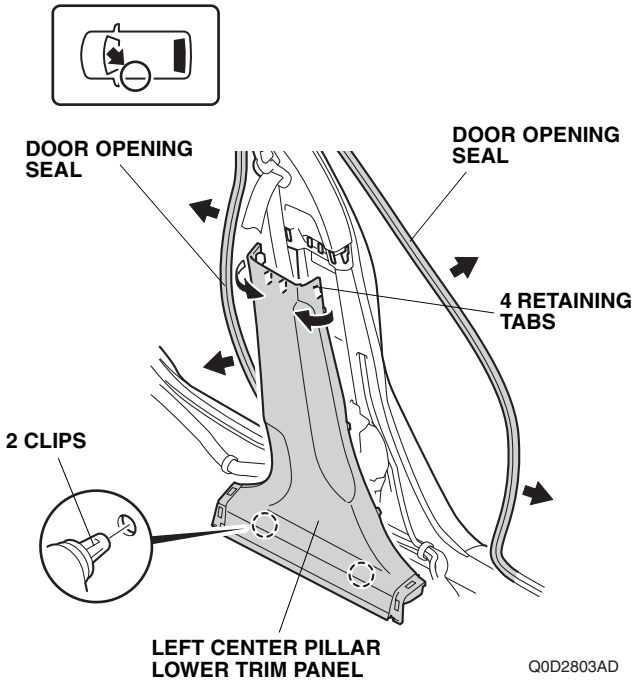

51. Remove the cargo floor board.

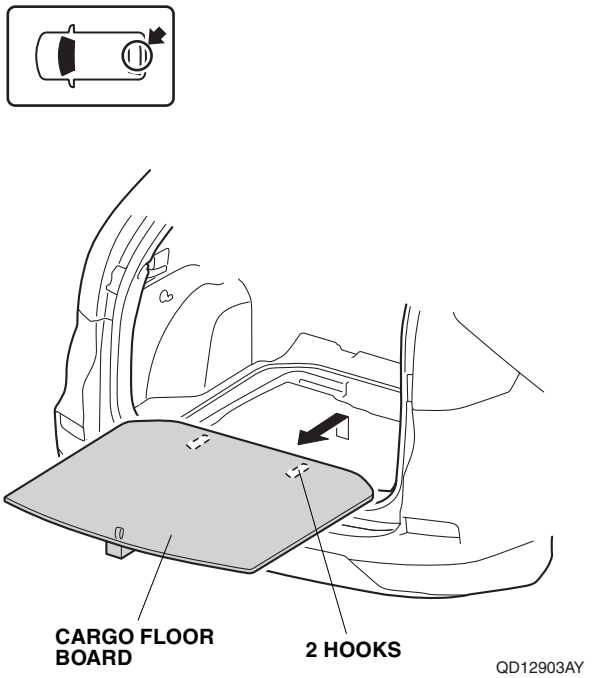

52. Remove the rear trim panel.

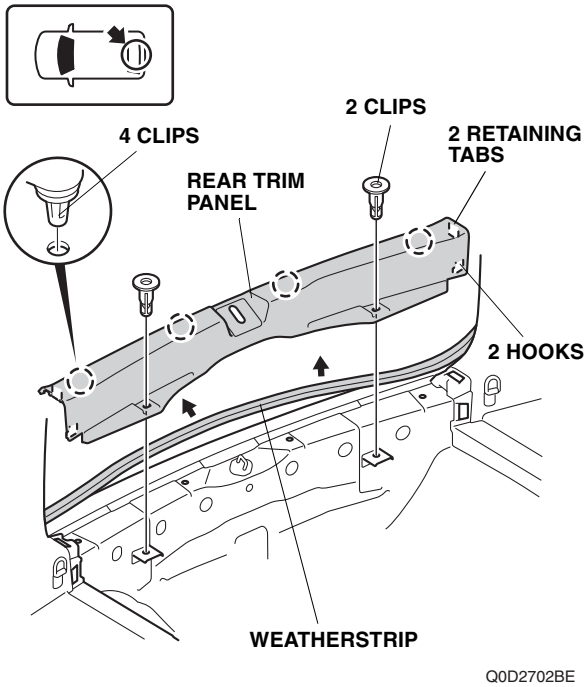

53. Remove the left rear damper cover.

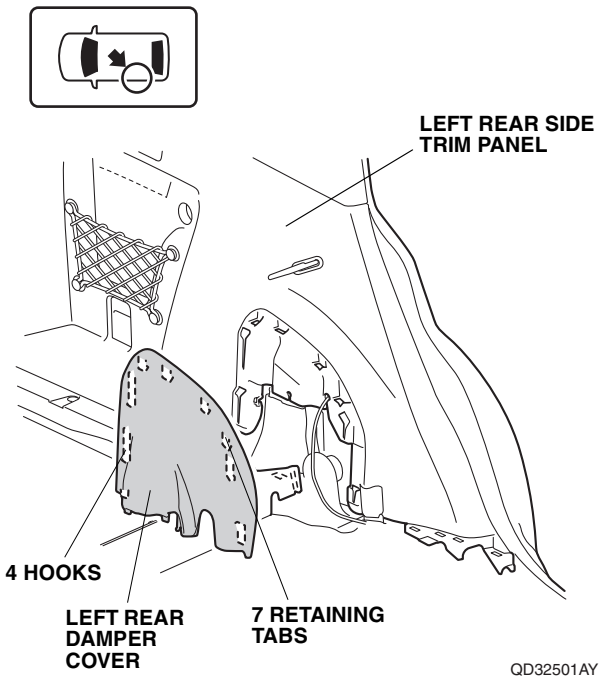

54. Release the seat back cover.

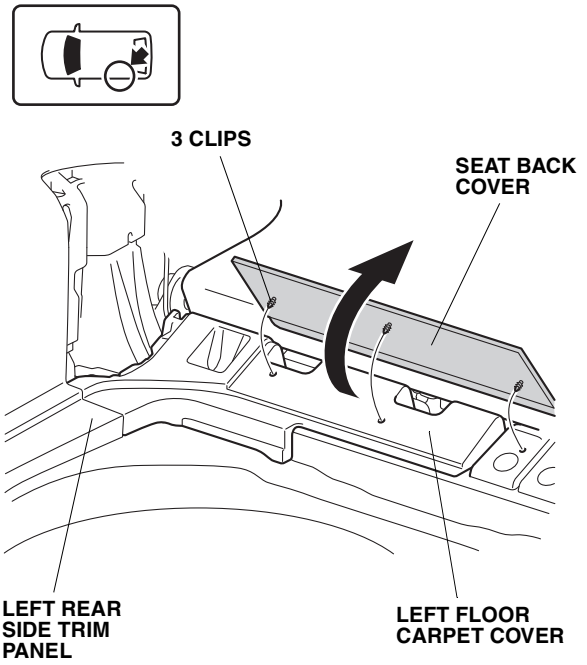

55. Remove the left floor carpet cover.

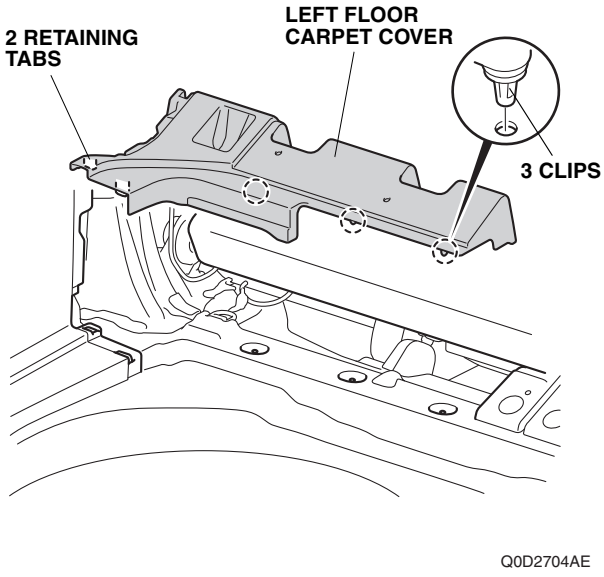

56. Remove the inner handle cap.
57. Remove the screws.

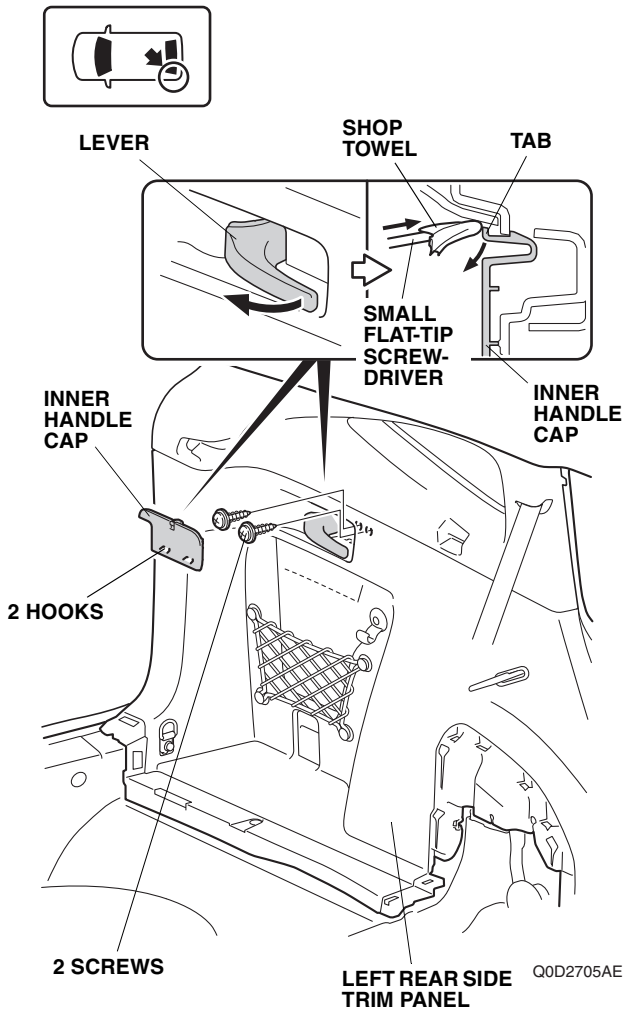

58. Remove the hook.

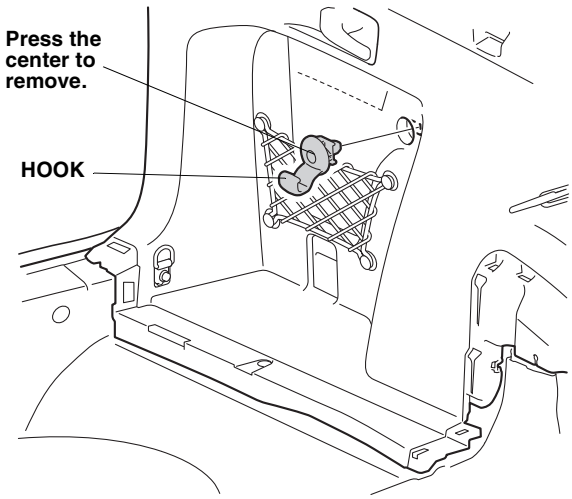

• With left rear side spacer To step 59 • Without left rear side spacer To step 60

<With left rear side spacer>

59. Remove the left rear side spacer.

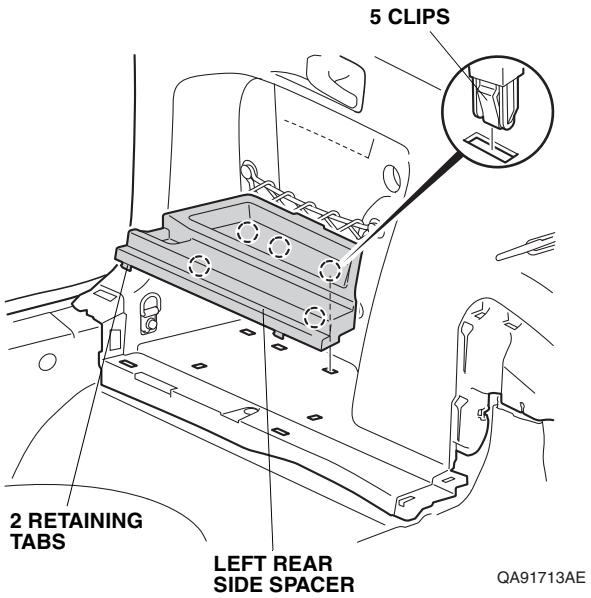

60. Remove the tie-down hook.

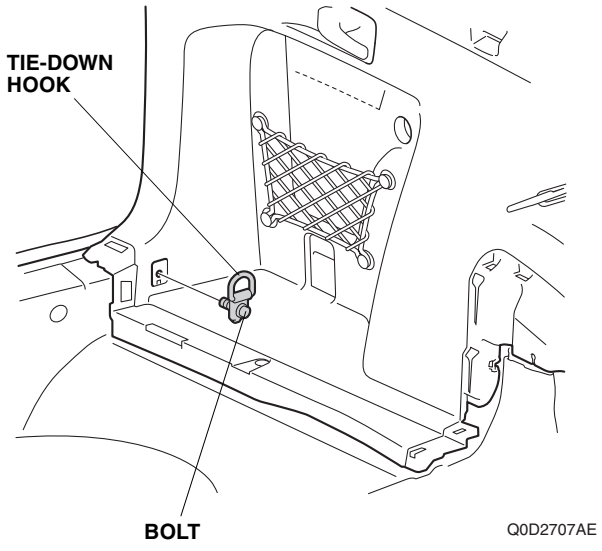

61. Release the left rear side trim panel.

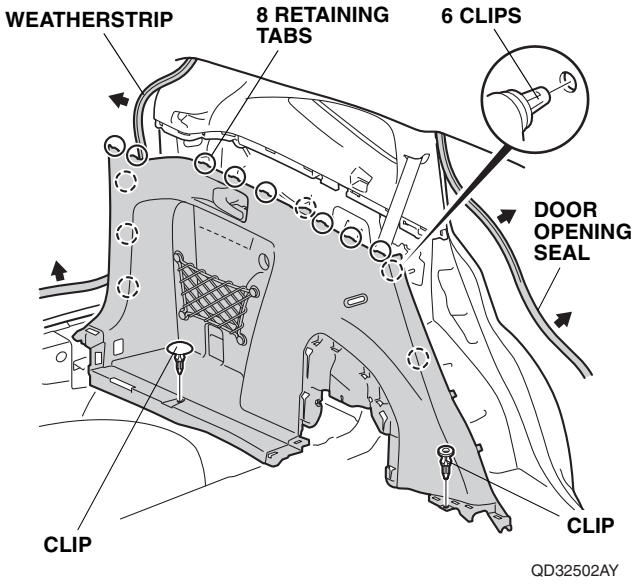

62. Remove the lever and wire.
63. Remove the left rear side trim panel.

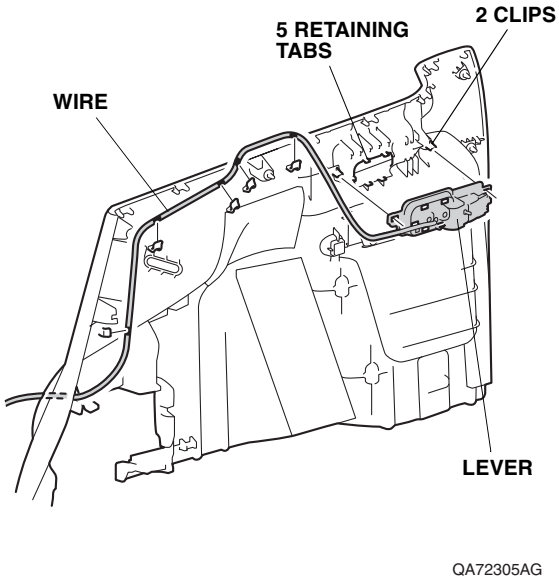

64. Release the clip.

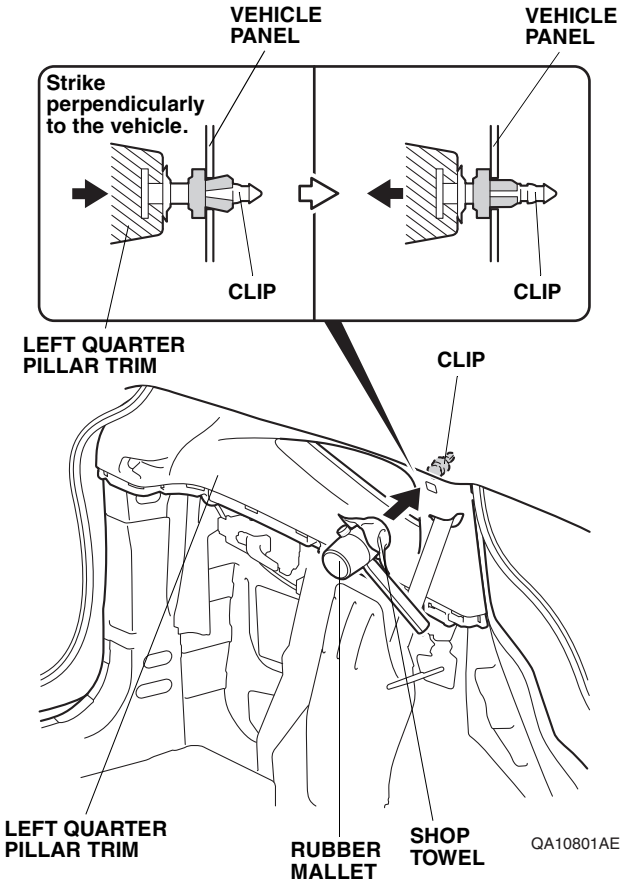

65. Remove the left quarter pillar trim.

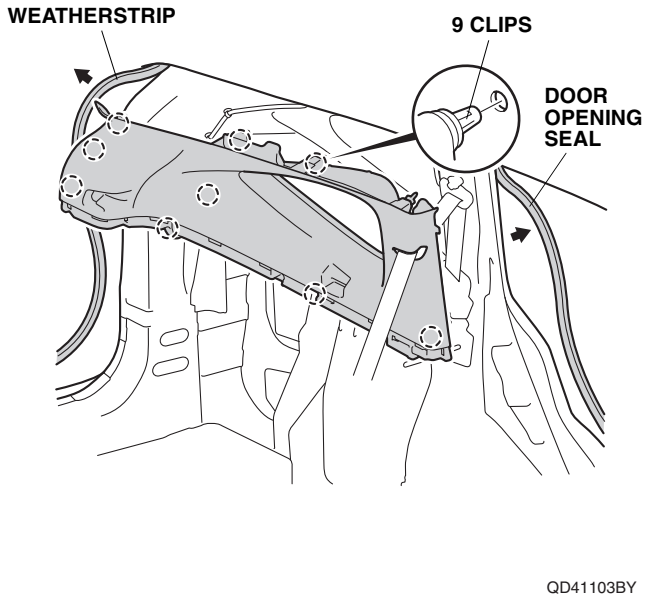

66. Remove the tailgate upper trim panel.

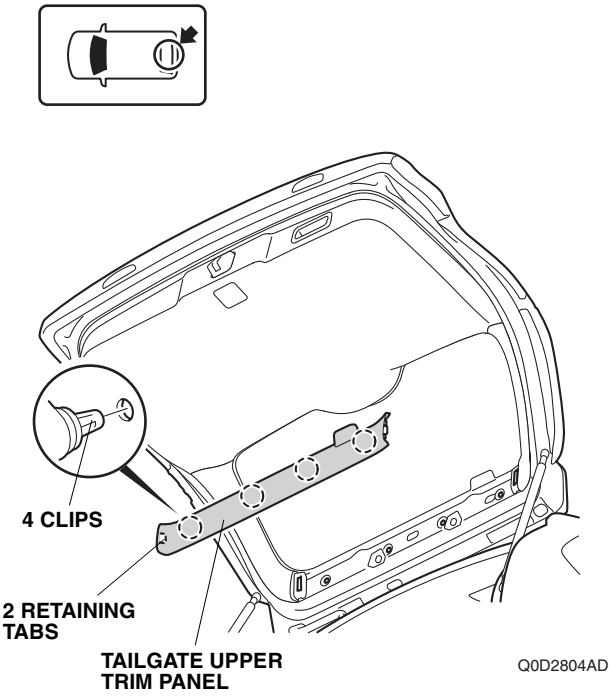

67. Remove the left and right tailgate trim panel.

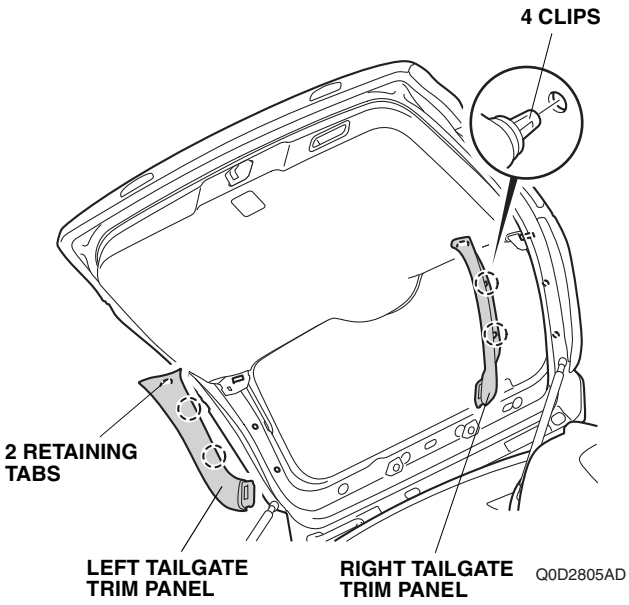

68. Remove the pull pocket.

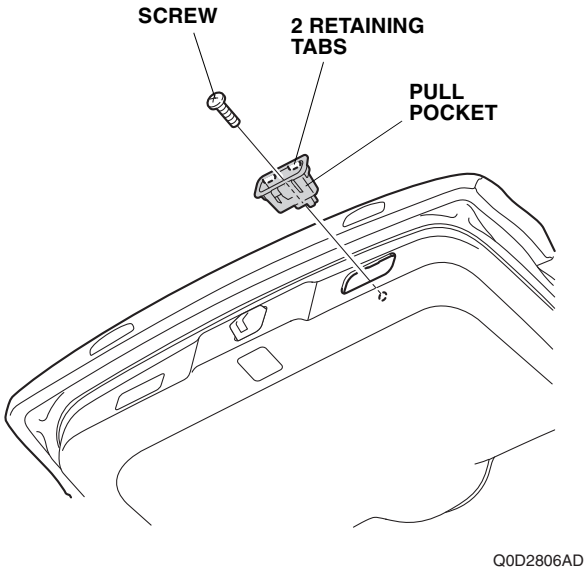

69. Remove the tailgate lower trim panel.

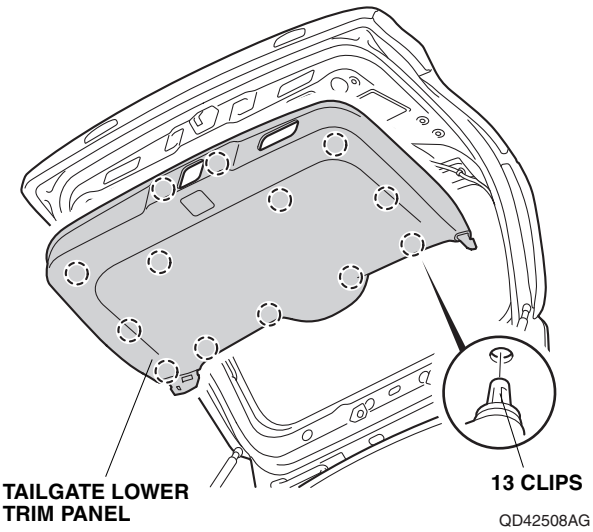

70. Remove the rear license garnish.

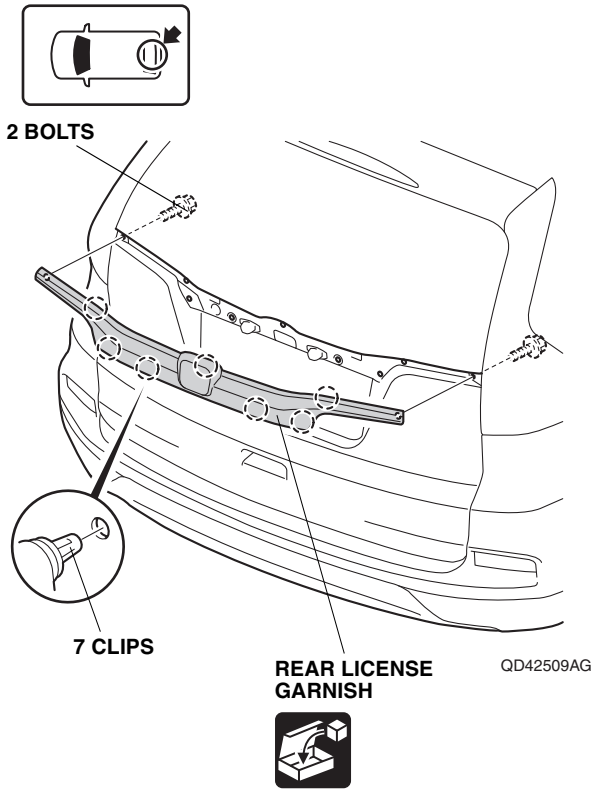

Installing the Camera

71. Attach the template.

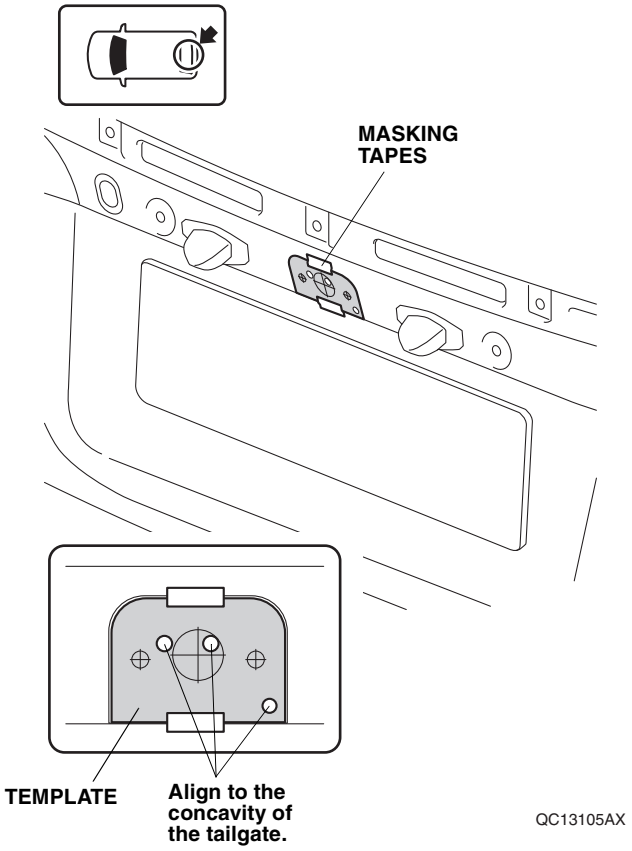

72. Mark the tailgate.

NOTICE
• Set the center punch to the minimum power setting.

73. Remove the template.

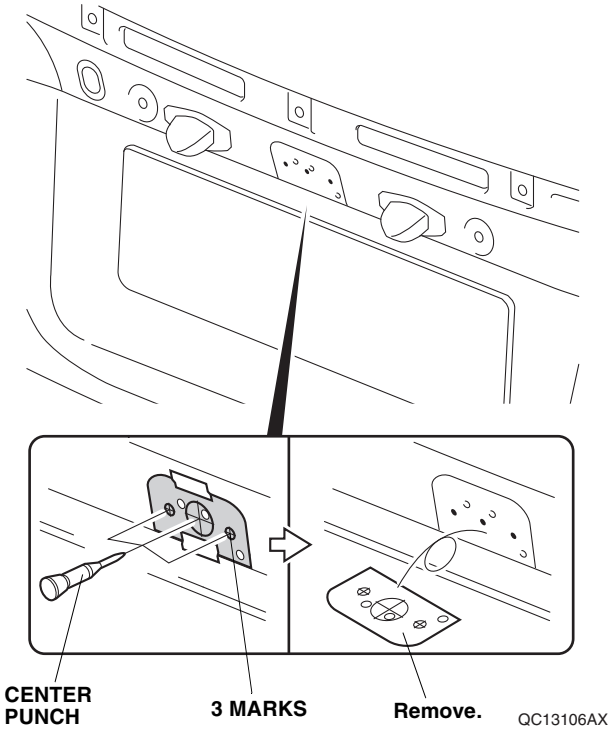

74. Drill the tailgate.

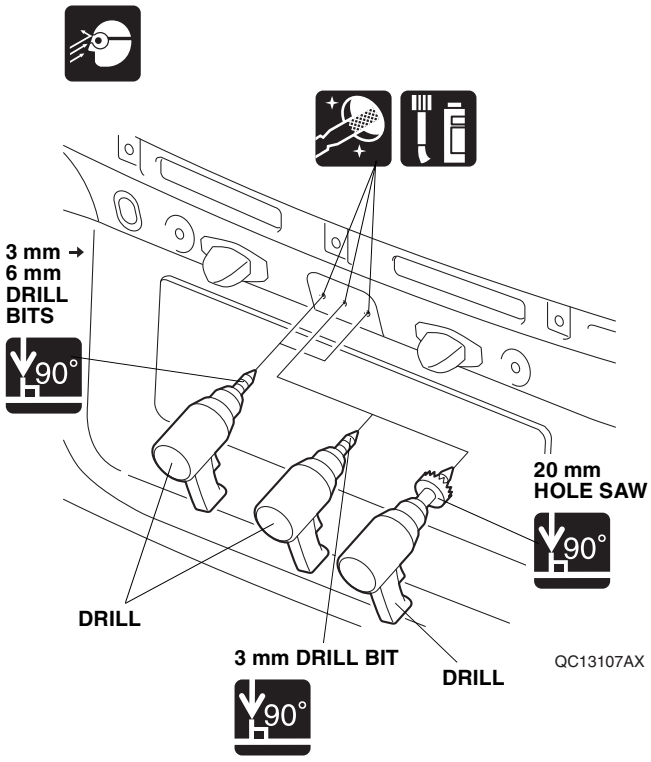

75. Install the corrugated tube.

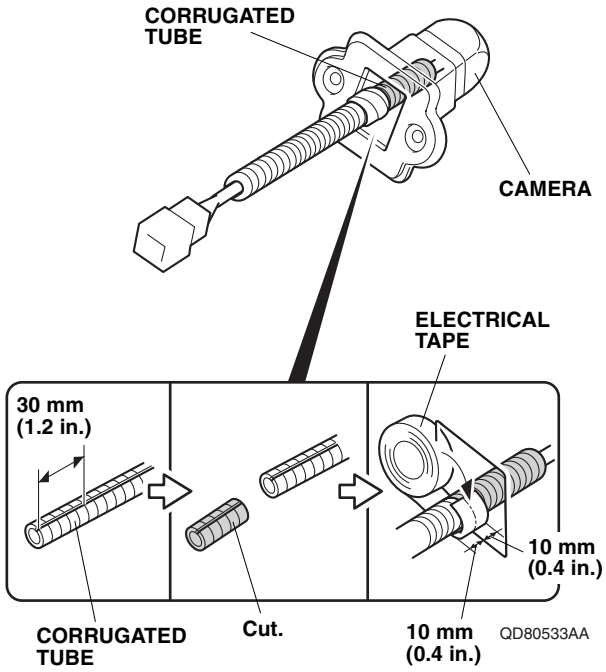

76. Secure the camera.

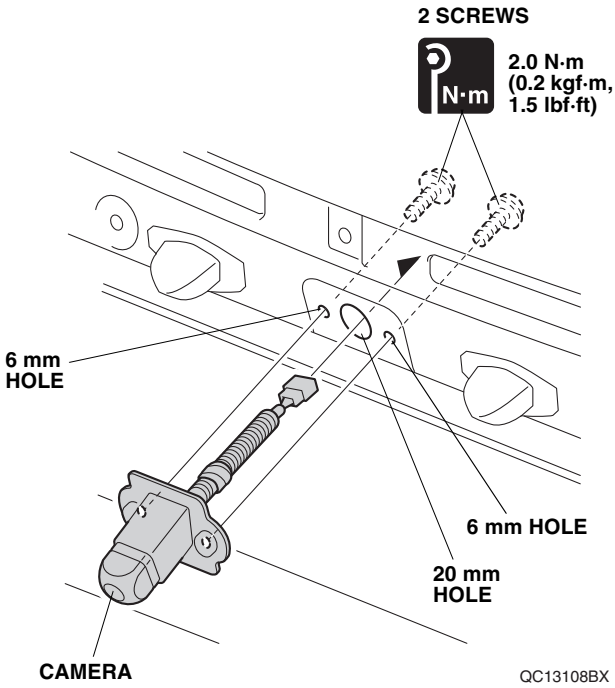

Routing the Harness B

77. Wrap the electrical tape.

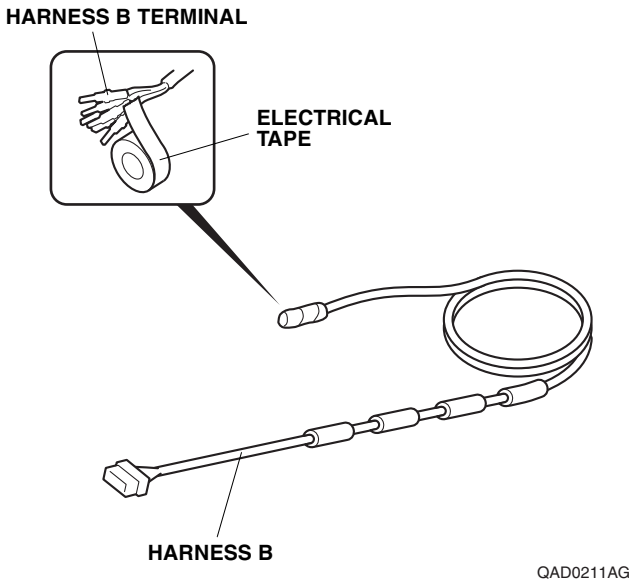

78. Connect the harness B connector.
79. Secure the connectors.

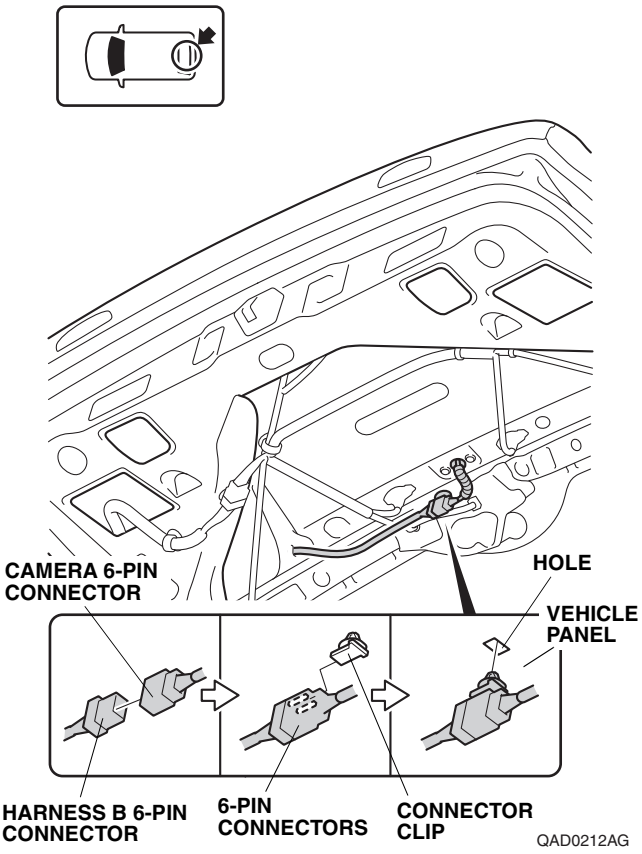

80. Secure the harness B.

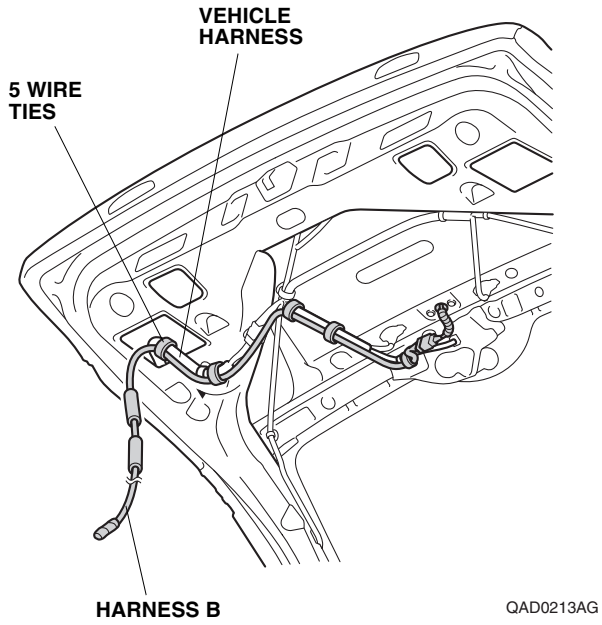

81. Remove the vehicle grommet.
82. Attach the steel wire.

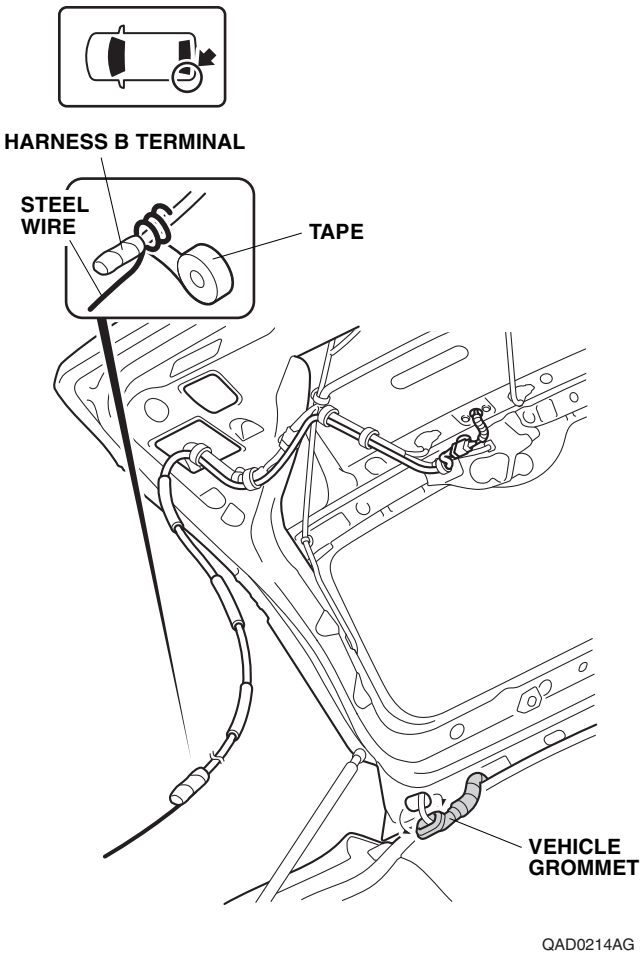

83. Route the harness B.

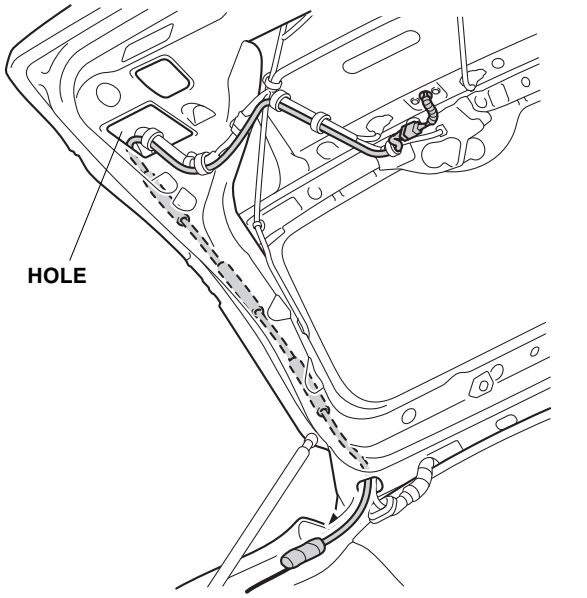

QAD0215AG

84. Remove the vehicle grommet.
85. Route the harness B.

NOTICE
• Do not damage the vehicle grommet or the vehicle harness with the steel wire. • Make sure that the steel wire is not caught between the vehicle harness inside the vehicle grommet.

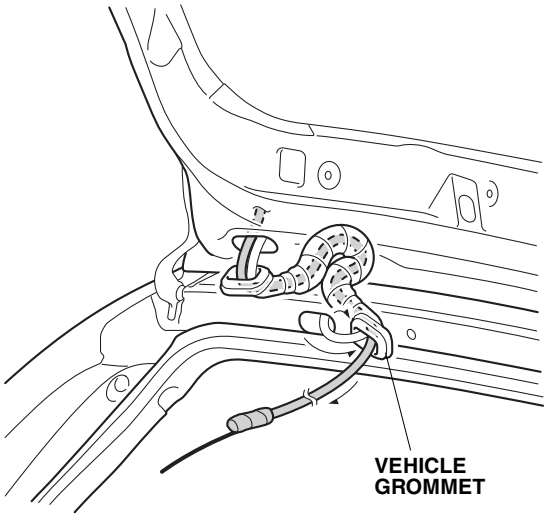

QAD0216AG

86. Install the vehicle grommet.

NOTICE
• Make sure to check that the vehicle grommet is secured properly.

87. Install the corrugated tube.

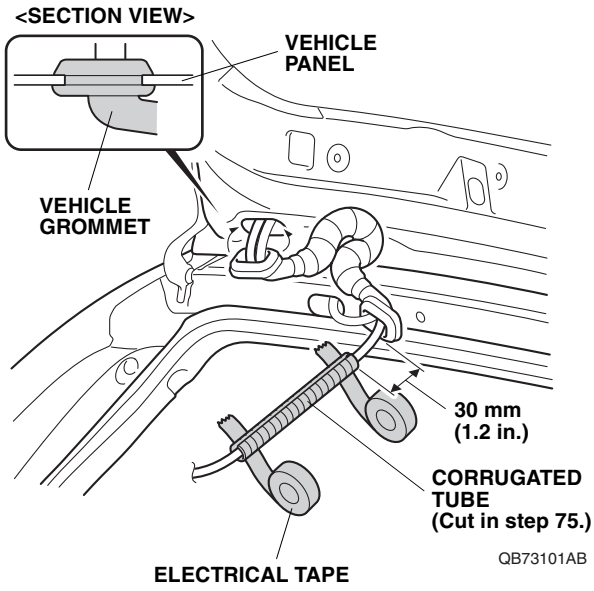

QB73101AB

88. Route the harness B.
89. Secure the harness B.
90. Install the vehicle grommet.

NOTICE
• Make sure to check that the vehicle grommet is secured properly.

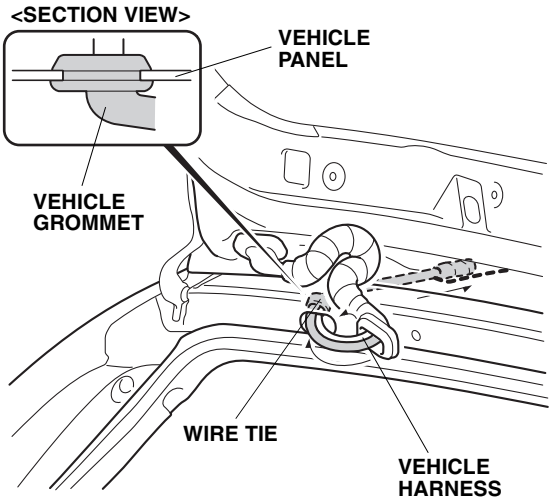

QB73102AB

91. Route the harness B.

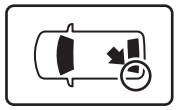

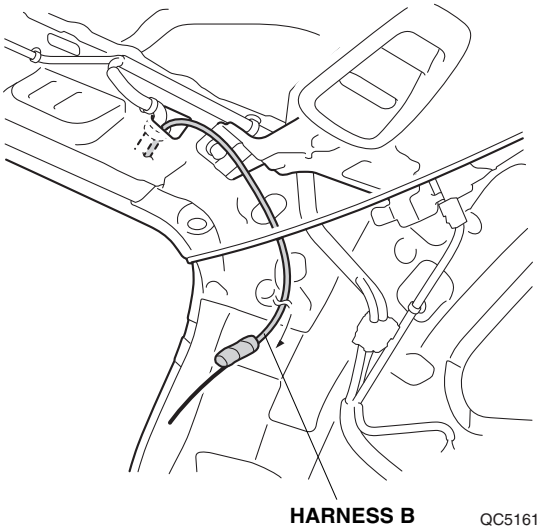

92. Remove the steel wire.

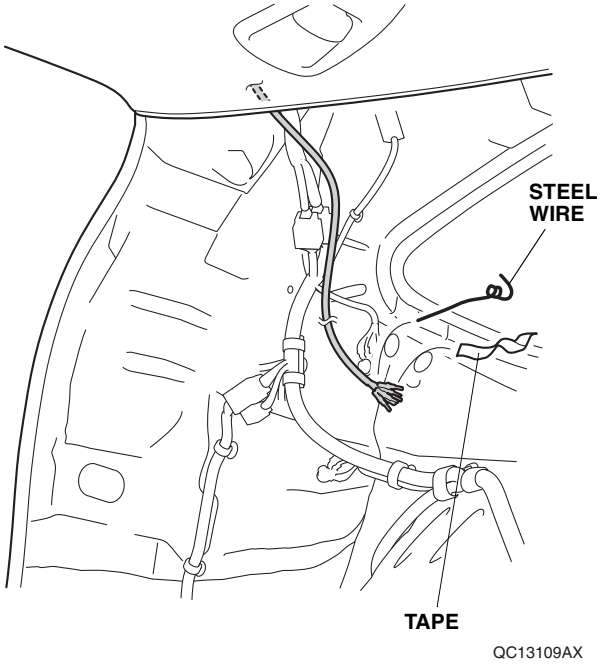

93. Secure the harness B.

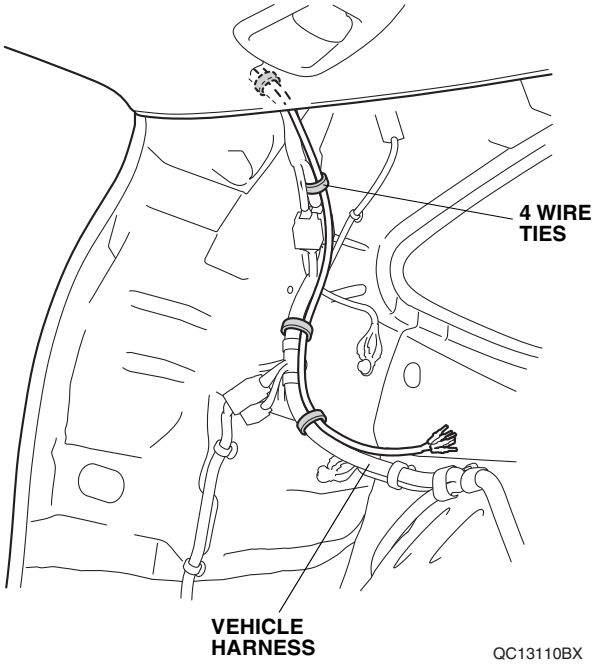

94. Install the 6-pin connector.

NOTICE
• Make sure to insert the terminal in the correct position.

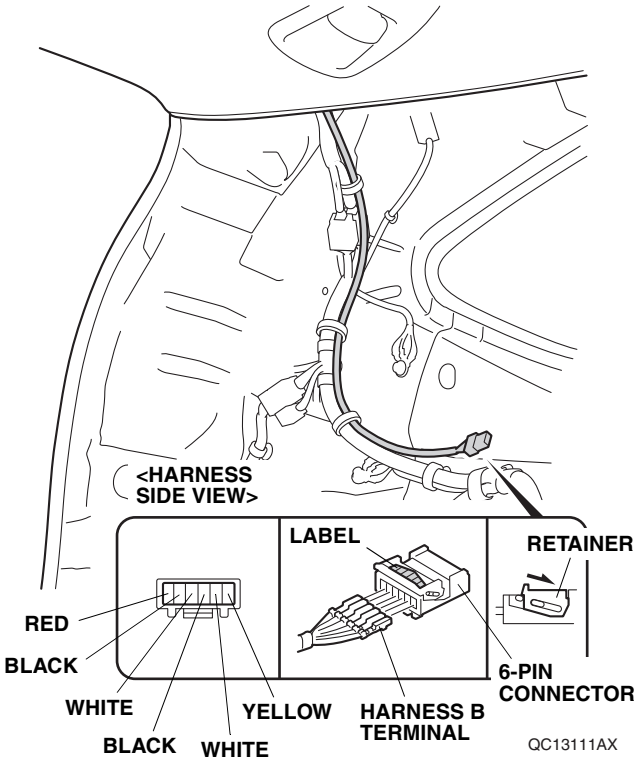

Routing the Harness A

• LHD models To step 95 • RHD models To step 111

<LHD models>

95. Route the harness A.

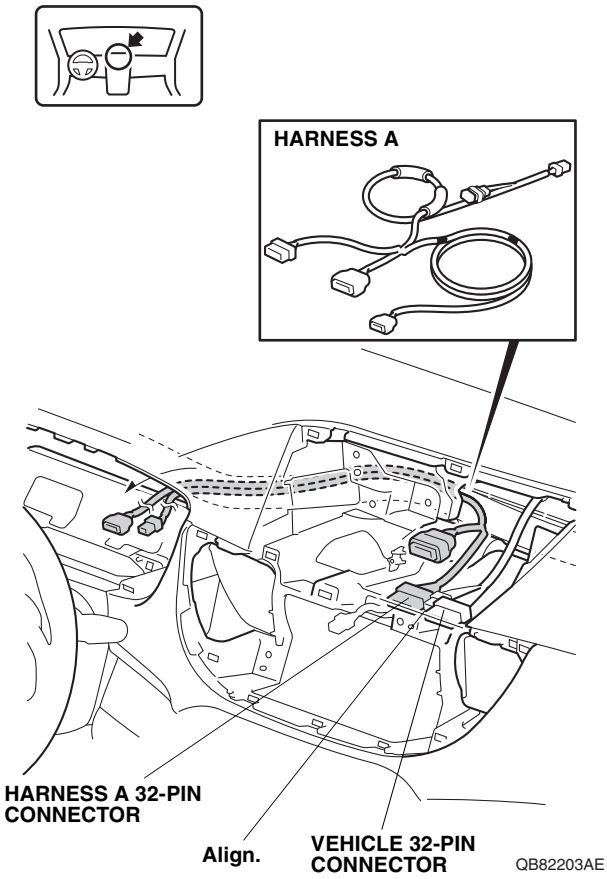

96. Connect the vehicle connector.

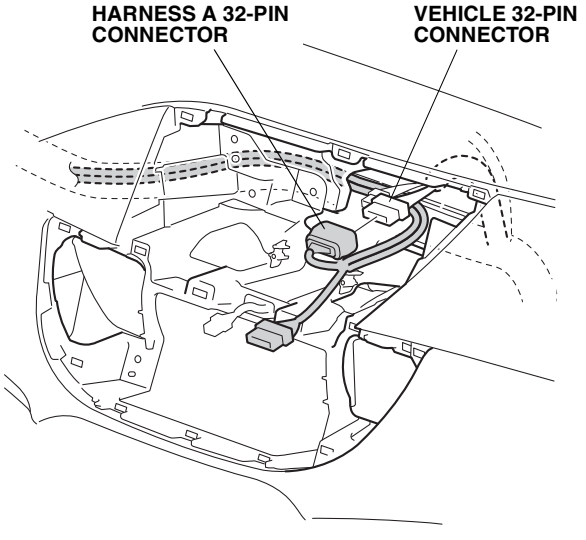

97. Secure the harness A and connectors.

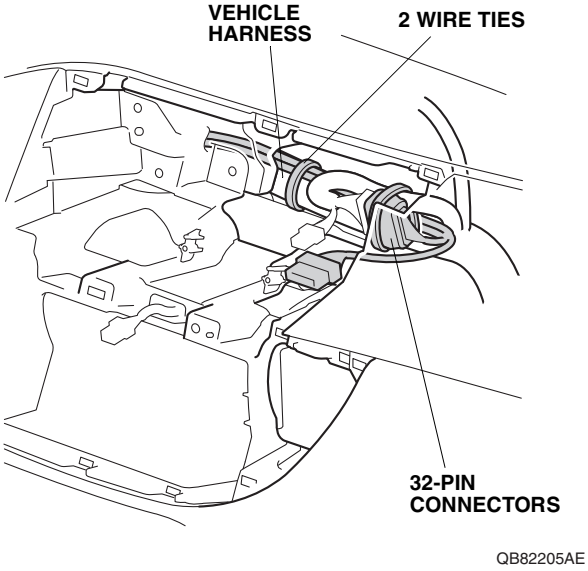

98. Secure the harness A.

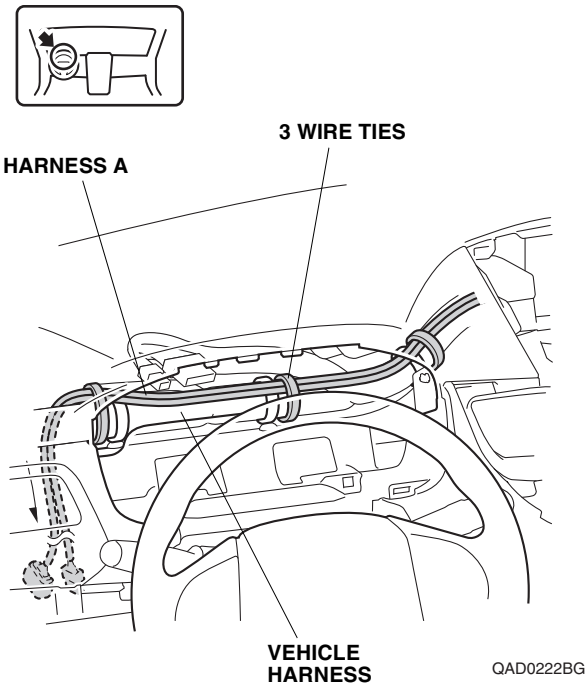

99. Secure the harness A.

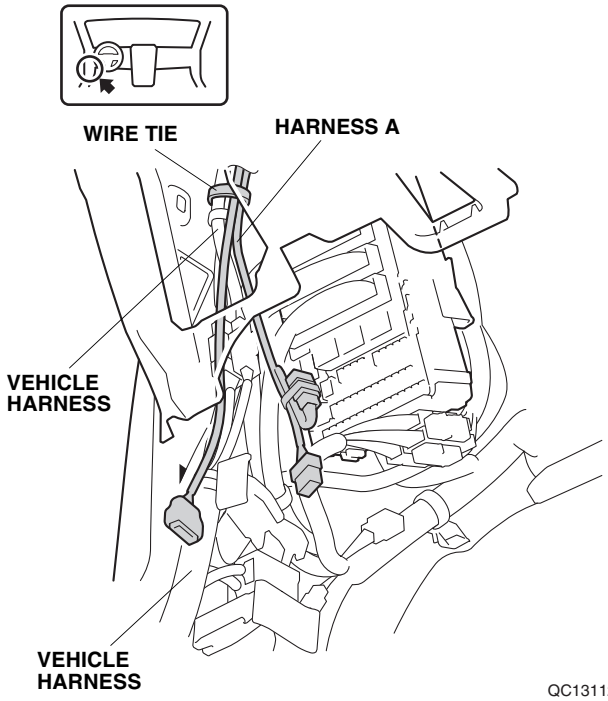

• Without other accessory harness To step 100
• With other accessory harness To step 101

<Without other accessory harness>

100. Connect the harness A connector.

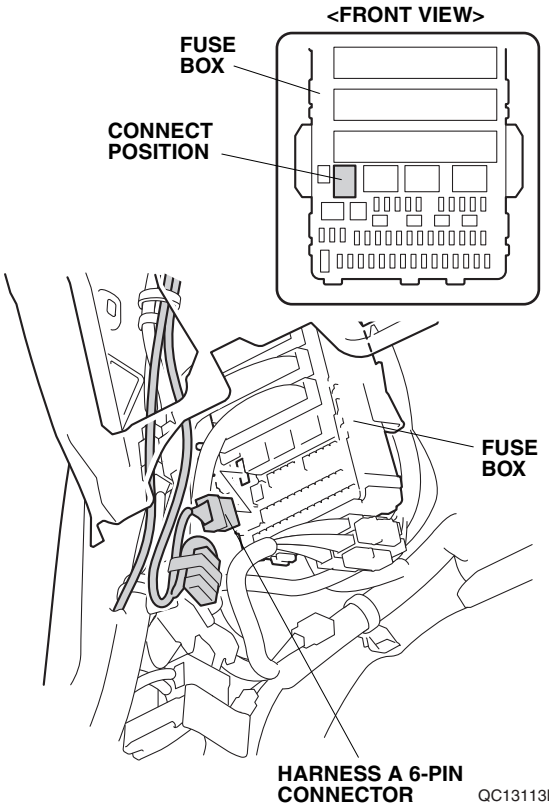

To step 102

<With other accessory harness>

101. Connect the harness A connector.

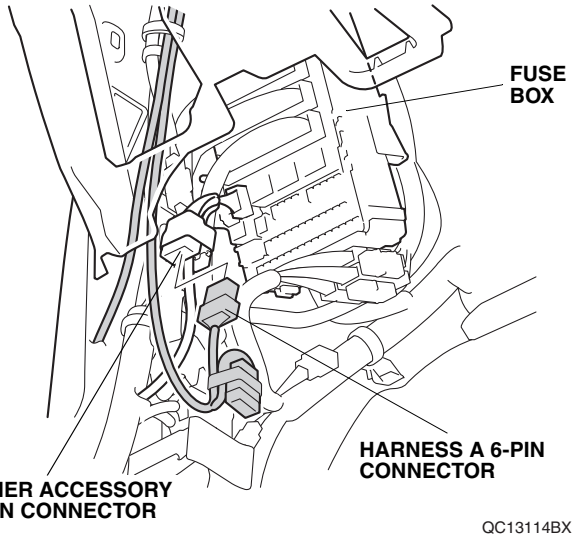

102. Secure the harness A.

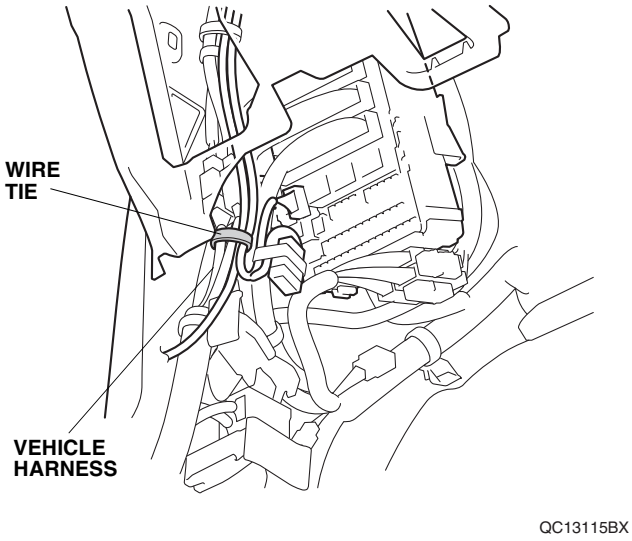

103. Secure the harness A.

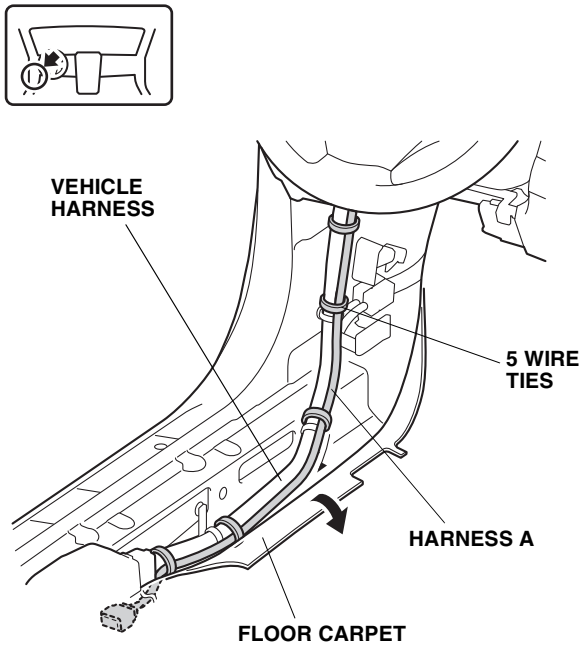

104. Secure the harness A.

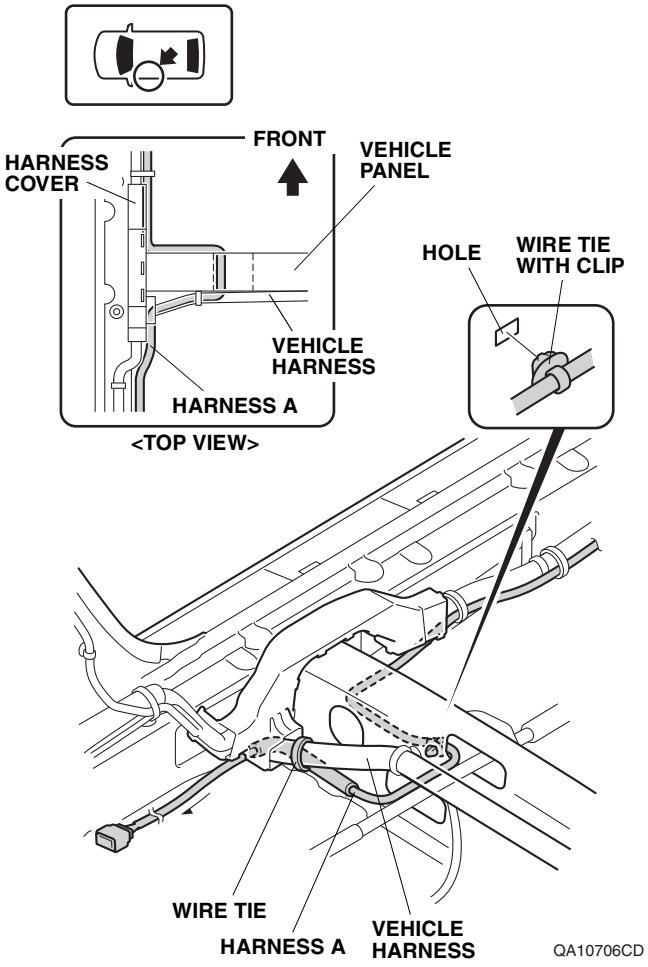

105. Secure the harness A.

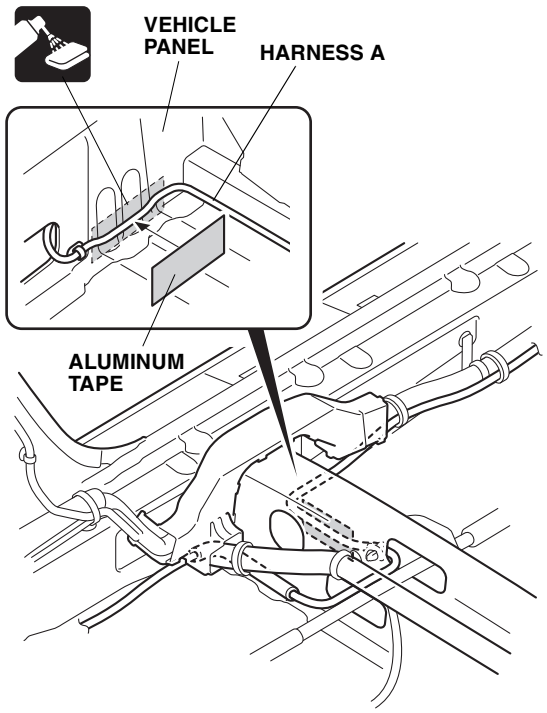

106. Secure the harness A.

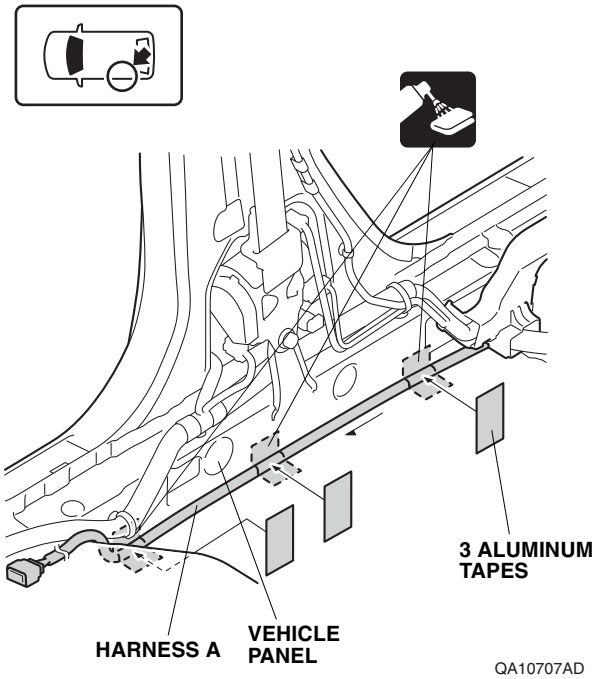

107. Secure the harness A.

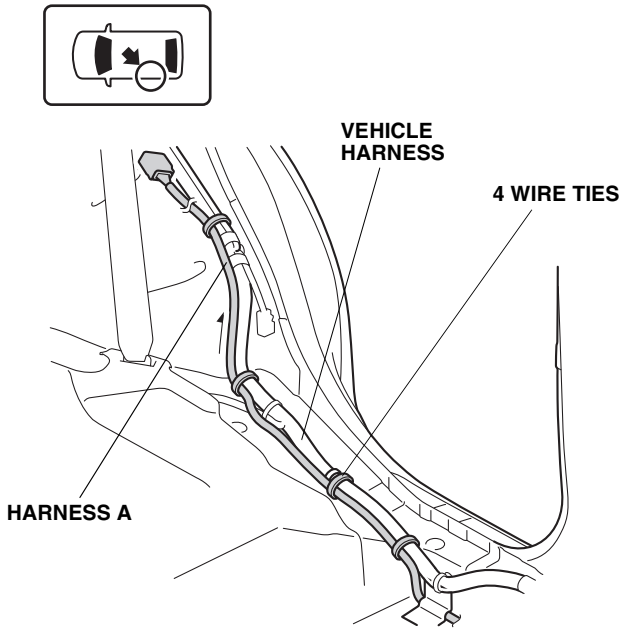

QA10801AD

108. Secure the harness A.

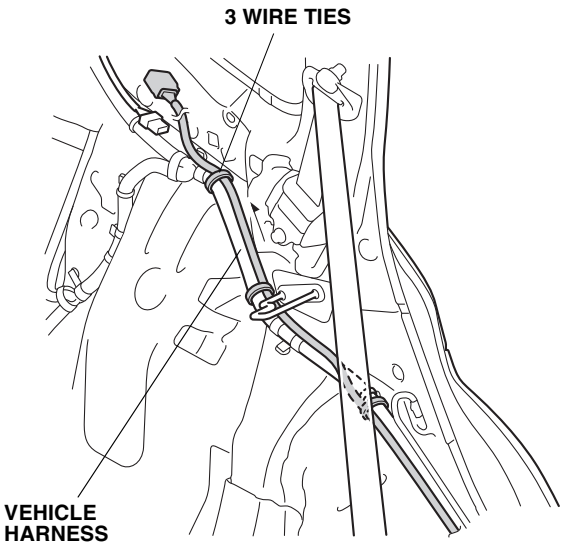

QA10802AD

109. Connect the harness B connector.
110. Secure the connectors.

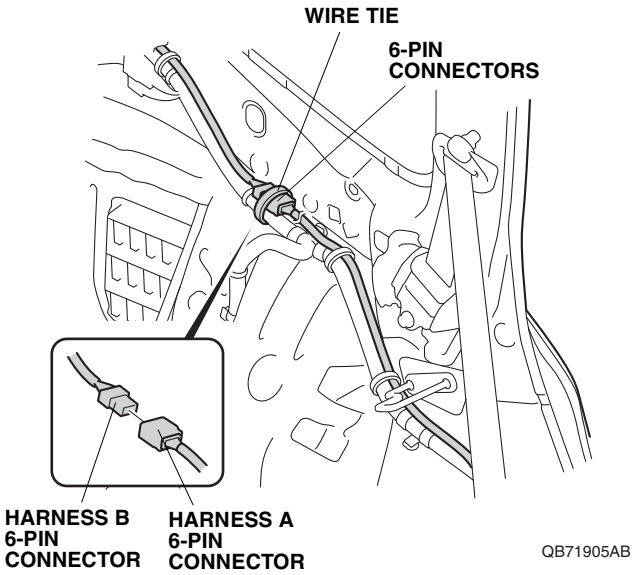

QB71905AB

To step 131

<RHD models>

111. Attach the steel wire.

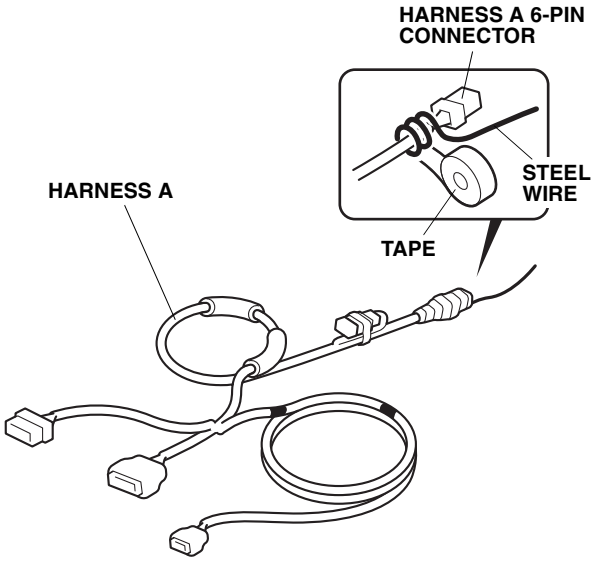

QC20101AX

112. Route the harness A.
113. Remove the steel wire.

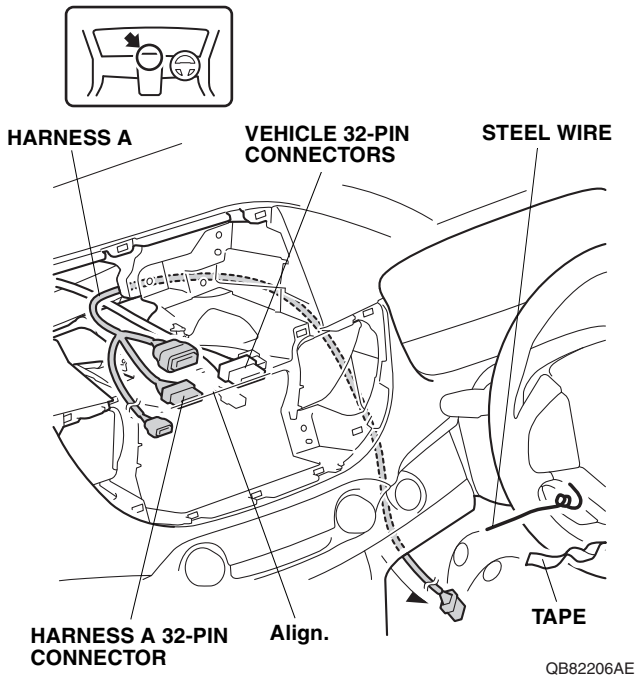

114. Secure the harness A.

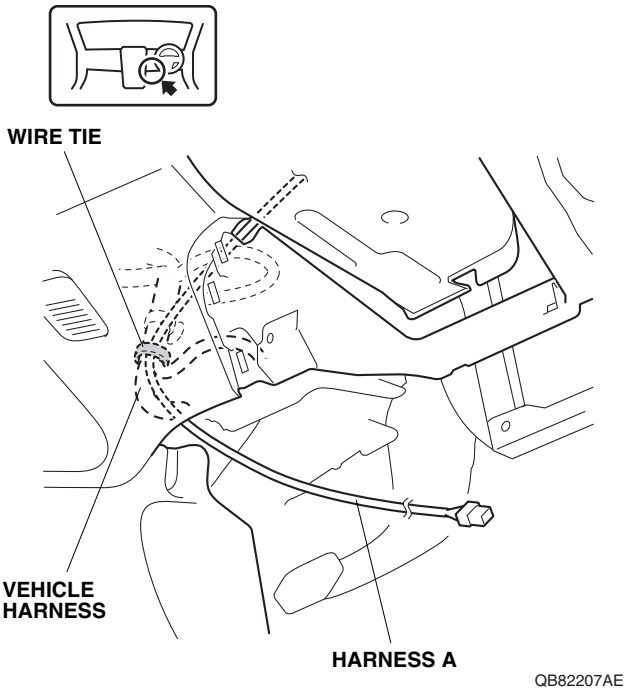

115. Secure the harness A.

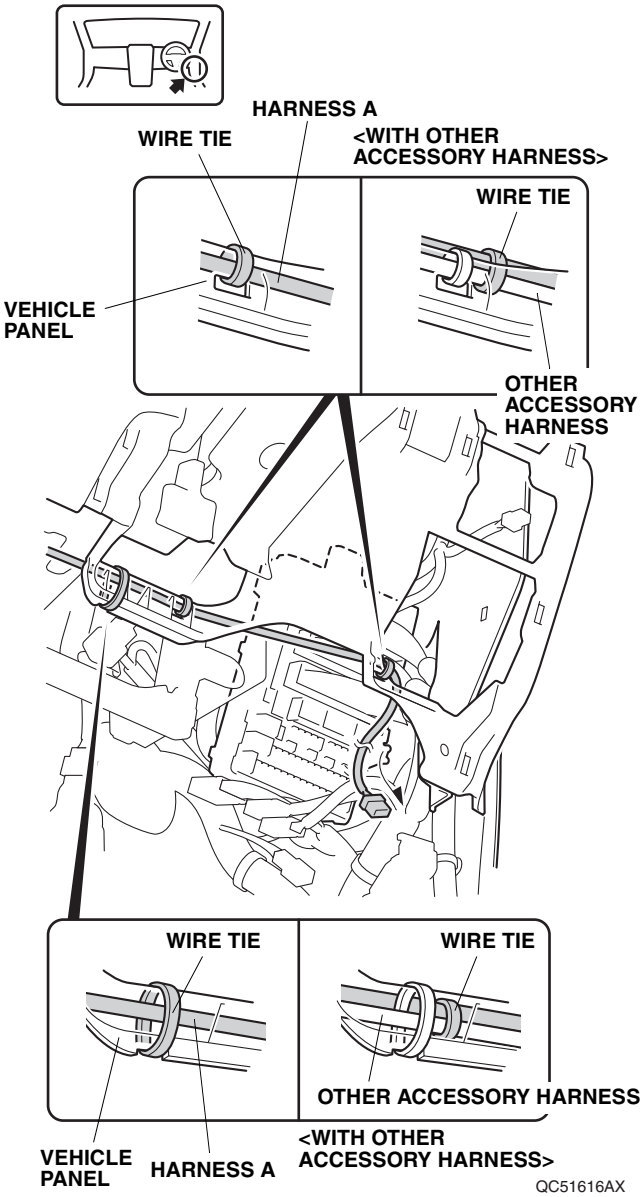

• Without other accessory harness To step 116 • With other accessory harness To step 117

<Without other accessory harness>

116. Connect the harness A connector.

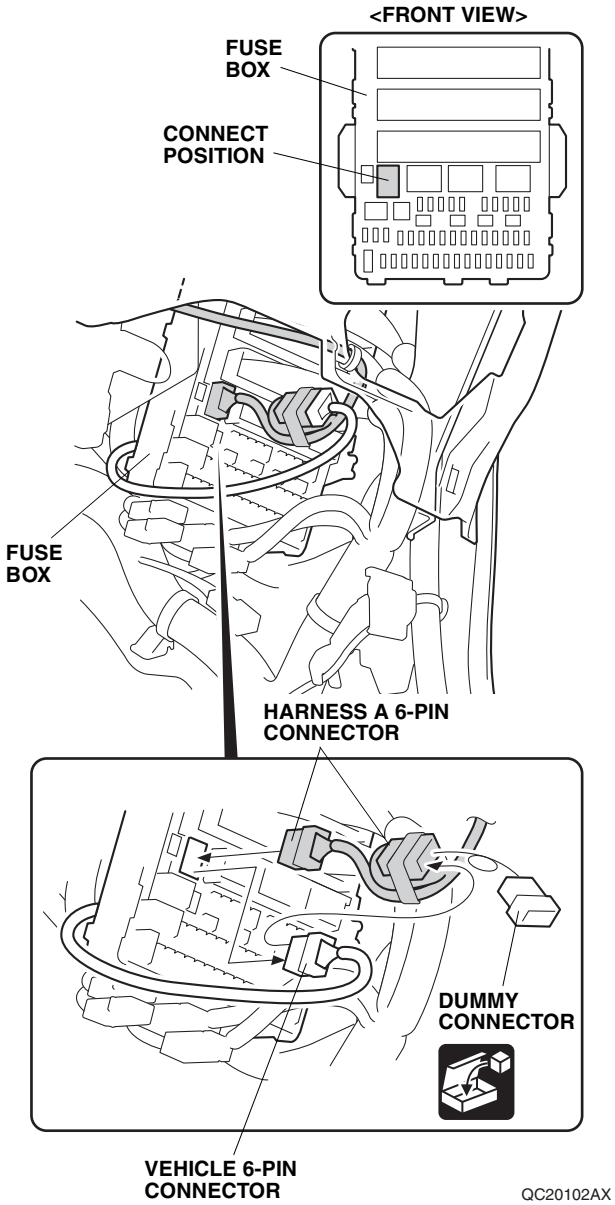

To step 119

<With other accessory harness>

117. Disconnect the vehicle harness connector.

118. Connect the harness A connector.

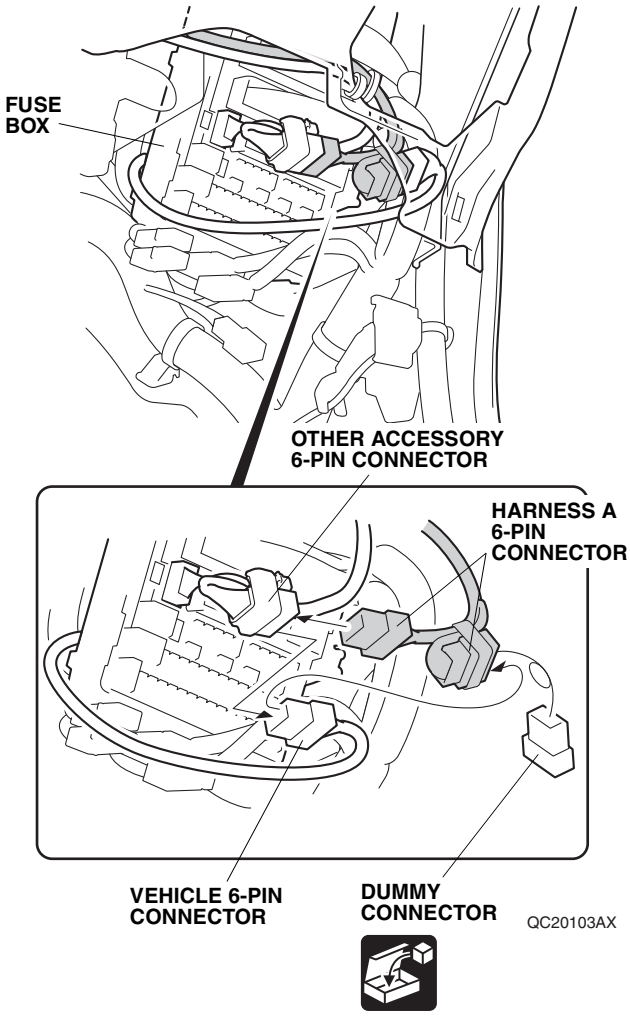

119. Connect the vehicle connector.

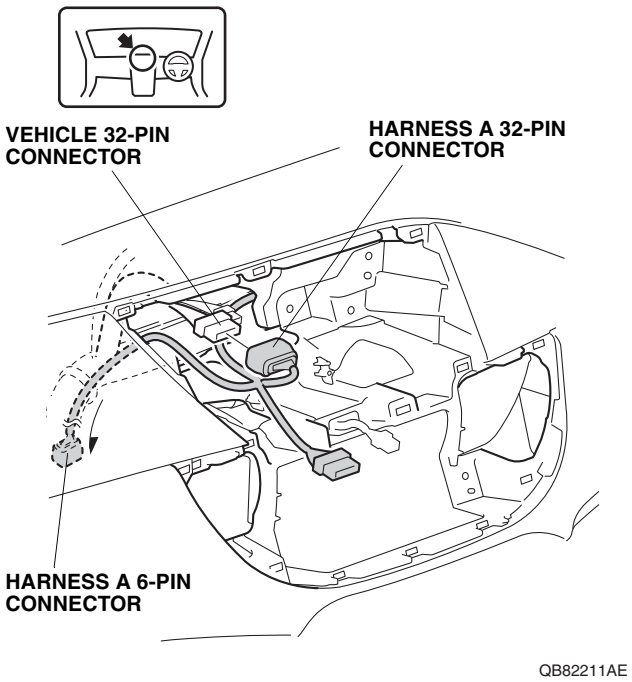

120. Secure the harness A and connectors.

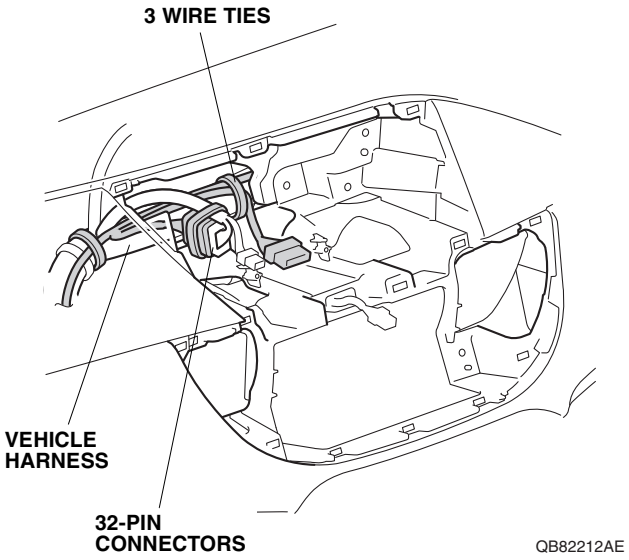

121. Secure the harness A.

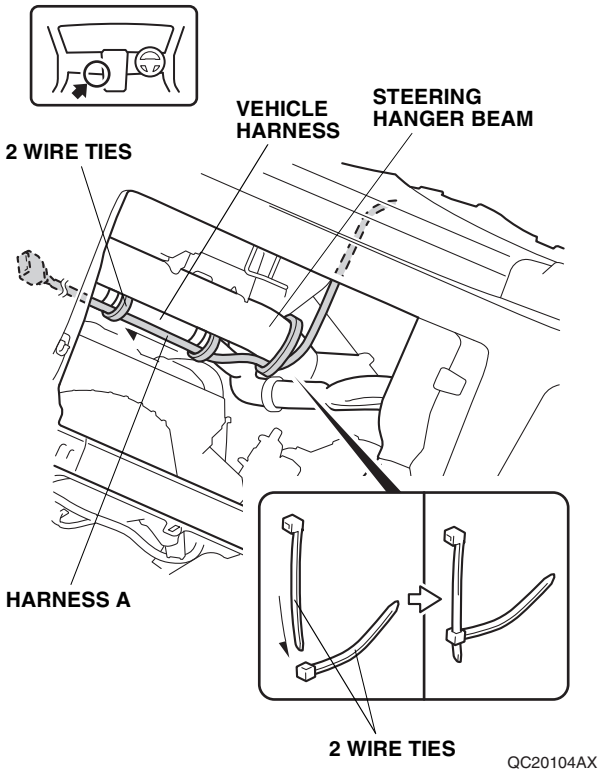

122. Secure the harness A.

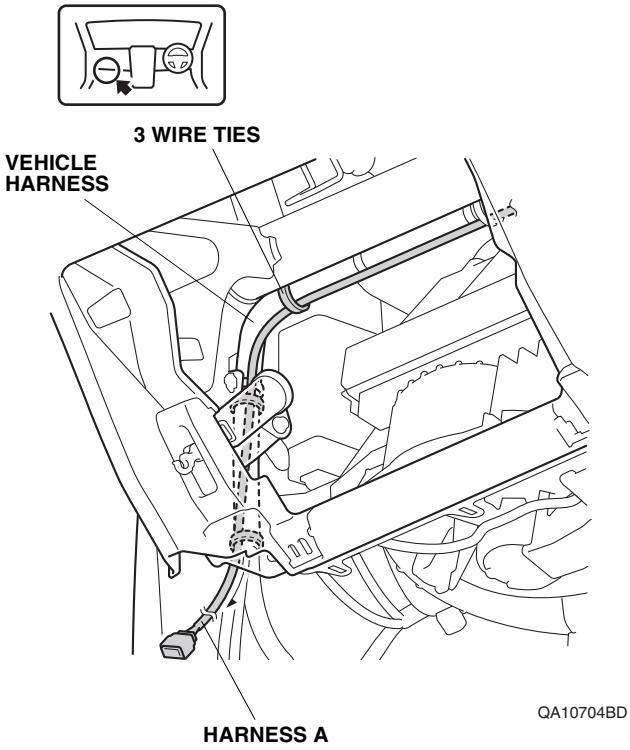

123. Secure the harness A.

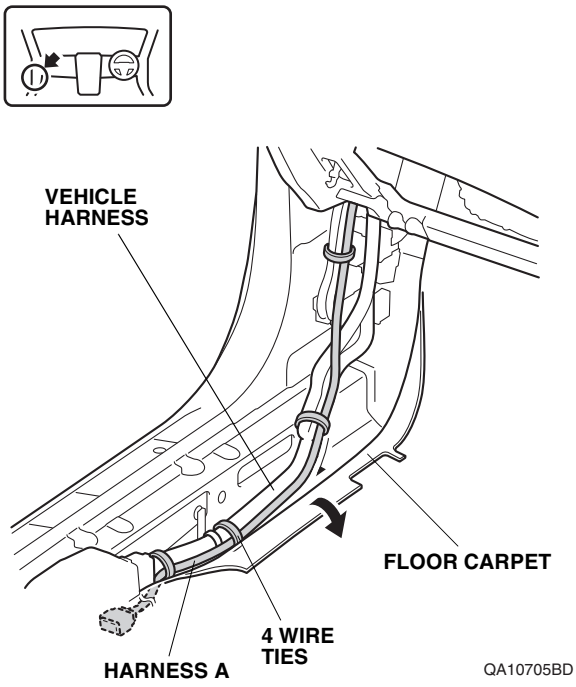

124. Secure the harness A.

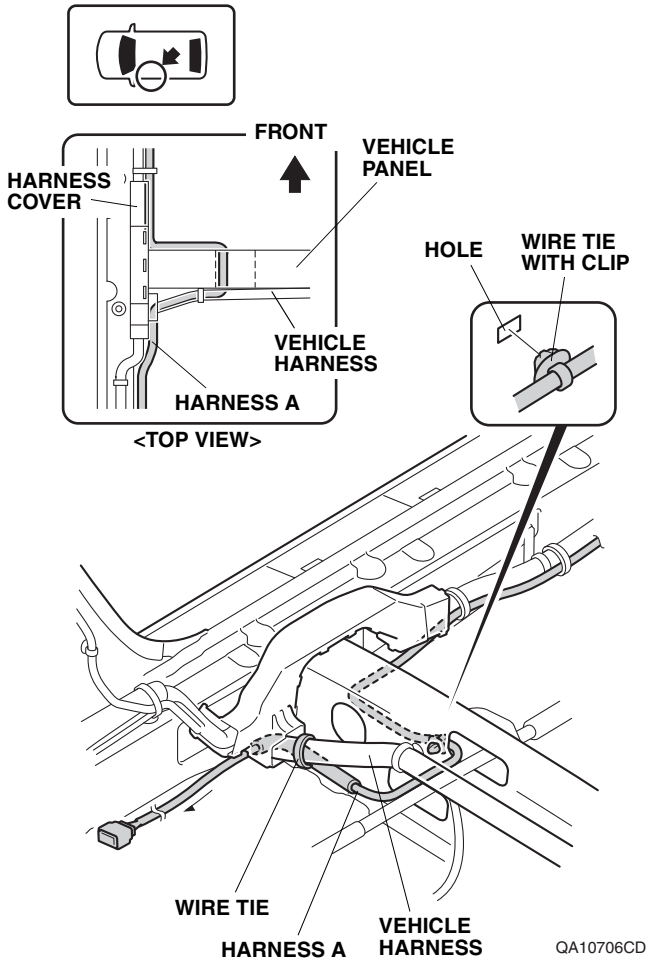

125. Secure the harness A.

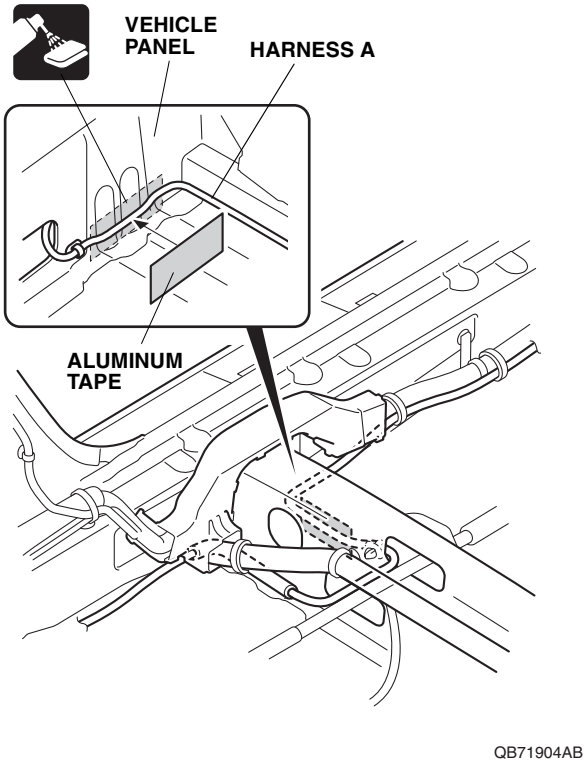

126. Secure the harness A.

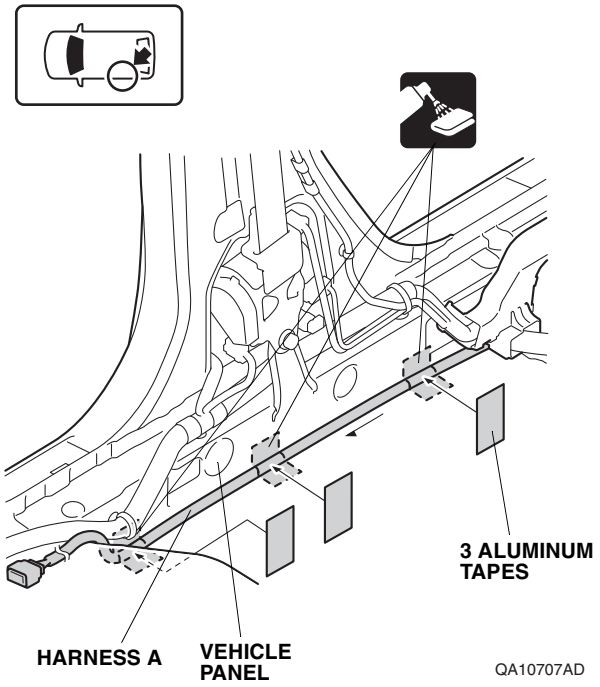

127. Secure the harness A.

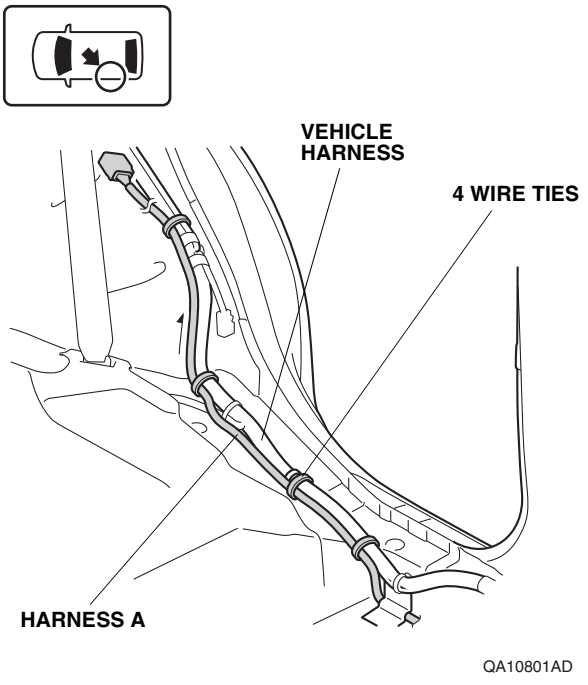

128. Secure the harness A.

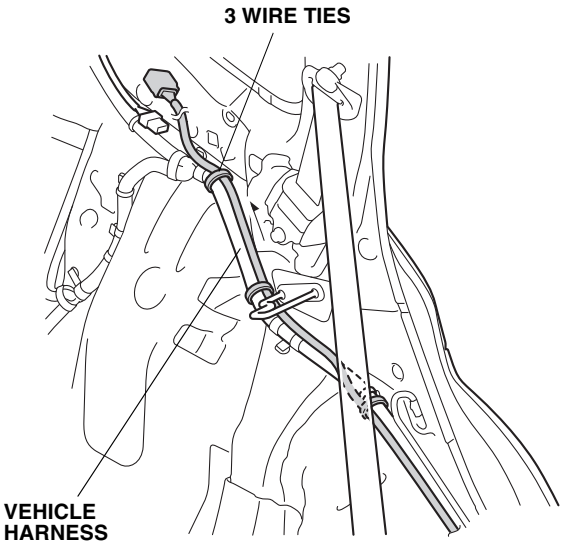

QA10802AD

129. Connect the harness B connector.
130. Secure the connectors.

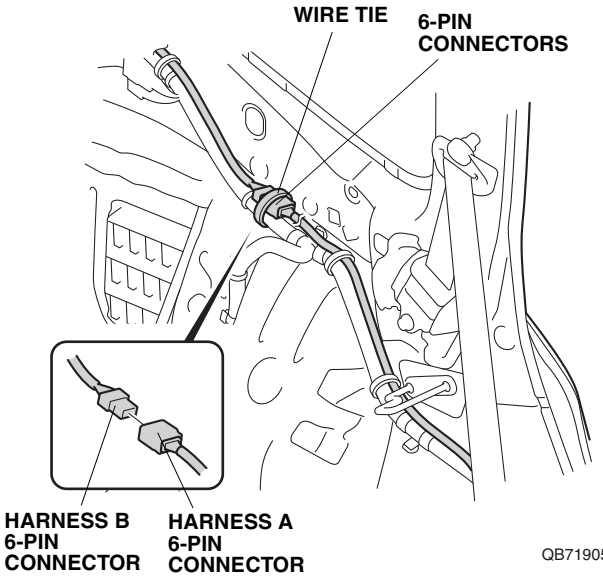

QB71905AB

Installing the Rear License Garnish

131. Clean the tailgate.

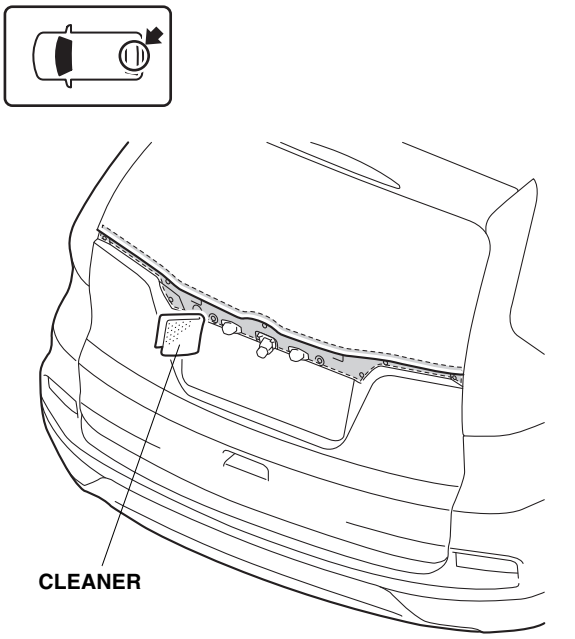

QD80534AA

132. Install the rear license garnish.

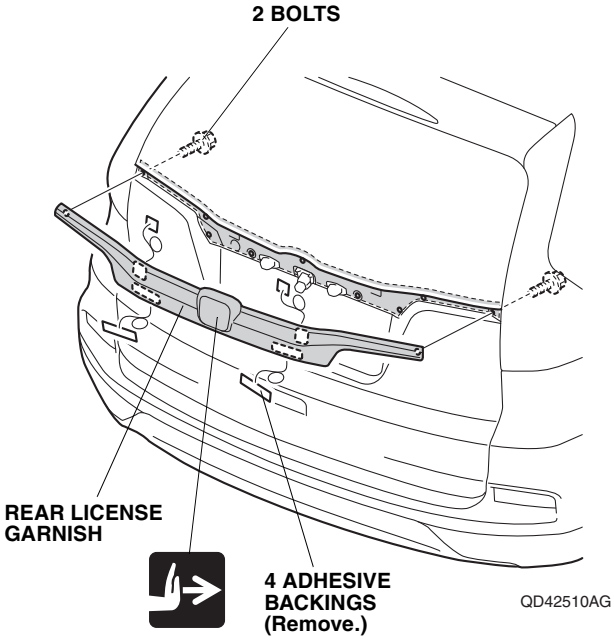

QD42510AG

Check After Installation

133. Check that all parts are routed and installed properly.

NOTICE
• Check that the harnesses are not pushed, not pulled and not pinched. • Check that all clamps and wire ties are installed securely.

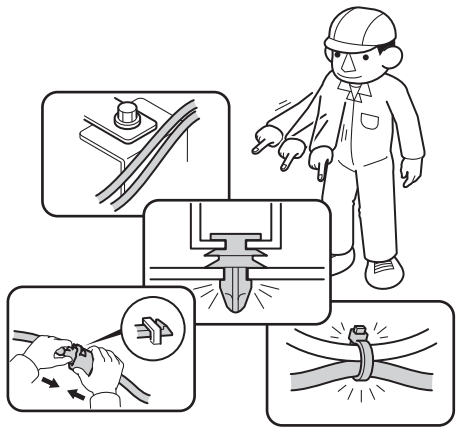

Q060706BM

Reinstalling the All Removed Parts

134. Reinstall all removed parts.

NOTICE
• Be extremely careful not to damage the vehicle parts, pinch the harnesses. • Make sure to secure the retaining tabs and clips properly to avoid separation.

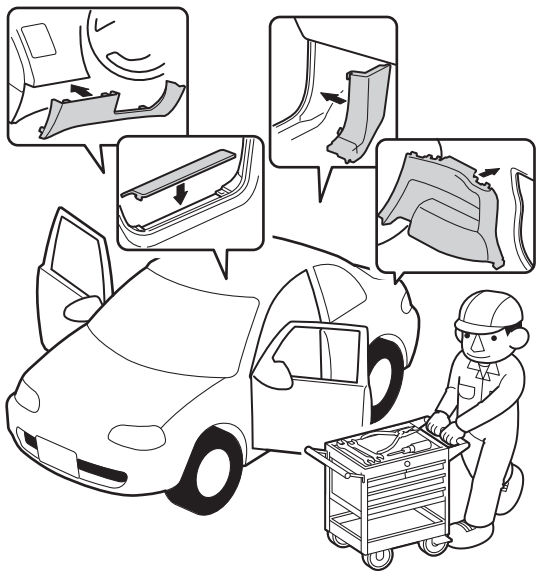

Q060703AM

<Installing the Quarter Pillar Trim>

135. Check the overlap between the headliner and the quarter pillar trim.

NOTICE
• Check and adjust the overlap as described in the Shop Manual.

136. Replace the clip of the quarter pillar trim.

NOTICE
• Be sure to replace with the clip included in this kit.

137. Reinstall the quarter pillar trim.

NOTICE
• Make sure the side curtain airbag is not tucked under the clips. • Do not push the quarter pillar trim excessively.

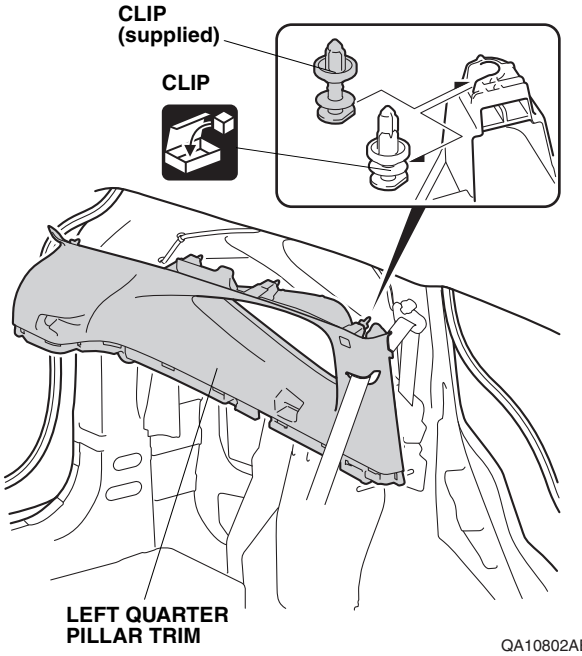

QA10802AE

Operation Check

138. Reconnect the negative cable to the battery.

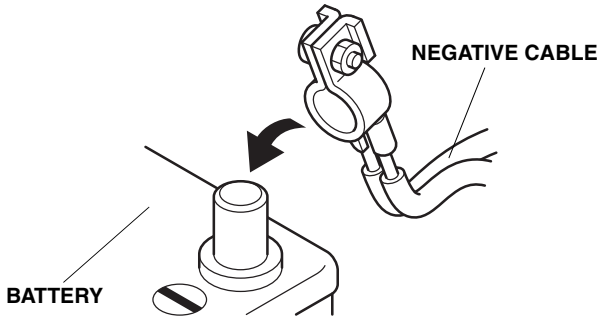

Q060702AM

139. Perform operation check by referring to the Owner's Manual.

Vehicle Check

140. Check that the electric accessories and systems operate properly.
141. Press and hold the audio power button for two seconds, or enter anti-theft code for the audio/ navigation system.
142. Reset the memory of each equipment and restore the positions of those control knobs.

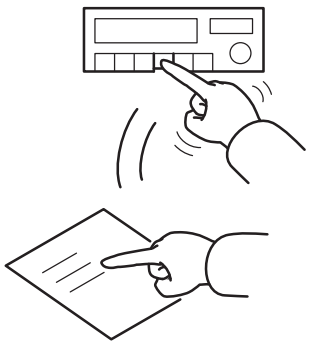

Q060704AM

Restoration and Learning Operations

NOTICE
• Restore the systems back to normal operation as described in the Shop Manual if necessary.

Please pass your customer the following things.

- Owner's Manual